ALL-ROUND FLASHING LIGHT 10 J
PMF 2015-SIL



Extremely bright flashing light by light bundling with fesnel lens, low power consumption.

- To signal dangerous situations in safety-relevant application such as process and plant safety, e.g.
  - leaks/gas warning, high-pressure/overfi lling
  and machine safety, e.g. as
  - start-up warning, muting indication, machine stop delay warning
- By means of integrated self-monitoring of the devices the normative required, regular inspection of warning devices is ensured.
- The warning devices can be implemented in Safety Instrumented Systems (SIS) up to **SIL 2/PLd.**

We would be more than happy to provide all safety-technical key data.

IP 55
protection system

+55 °C
–30 °C
operating temperature

PRODUCT		PMF 2015-SIL	
DATA			
Rated voltage		230 V	24 V
		AC 50 I 60 Hz	DC
Operating range		195–253 V	18–30 V
Nominal current consumption	flashing light	250 mA	700 mA
	diagnostics channel	80 mA	65 mA
Alarm contact	contact version	positively driven contact (1 x NC, 1 x NO)	
	switching current	max. 6 A	
	switching voltage	max. 250 V AC	
	max. switching power (AC)	1,500 VA AC	
	recommended min. load	>50 mW	
Flash rate of the main flash		1 Hz = 60 flashes/min	
Flash energy of the main flash		10 J	
Light intensity (DIN 5037) [1]		225 cd	
Max. viewing distance		348 m	
Beam angle		vertical approx. 16 °, horizontal 360 °	
Operating temperature		–30 °C ... +55 °C	
Storage temperature		–40 °C ... +70 °C	
Relative humidity		90 %	
Protection system (EN 60529)		IP 55 (vertical mounting)	
Duty cycle		100 %	
Service life of the light source		light emission still 70 % after 8,000,000 flashes	
Material	lens	polycarbonate (PC), fresnel characteristic	
	housing	bracket mounting: polycarbonate (PC) / direct mounting: acrylonitrile butadiene styrene (ABS)	
Cable entry	bracket mounting	M20x 1.5 for cables 6.5–13.5 mm	
Connecting terminal		single wire 0.5–2.5 mm², fine wire 0.5–1.5 mm², with cable end sleeves DIN 46228/1	
Weight	bracket mounting	1.1 kg	1.2 kg
	direct mounting	0.6 kg	0.7 kg

[1] with a clear lens

DIMENSIONS

bracket mounting

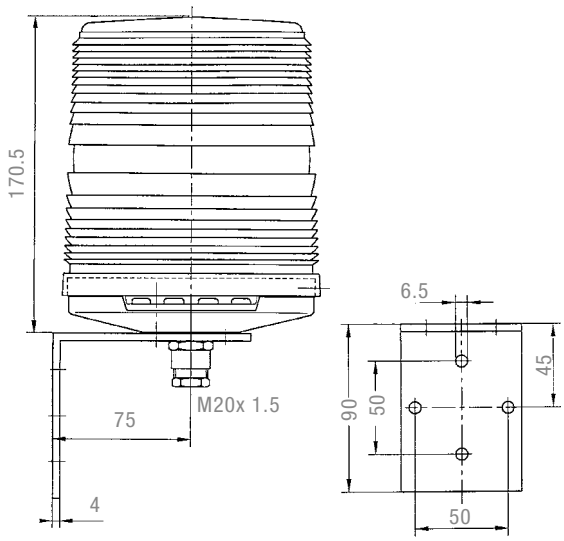

direct mounting

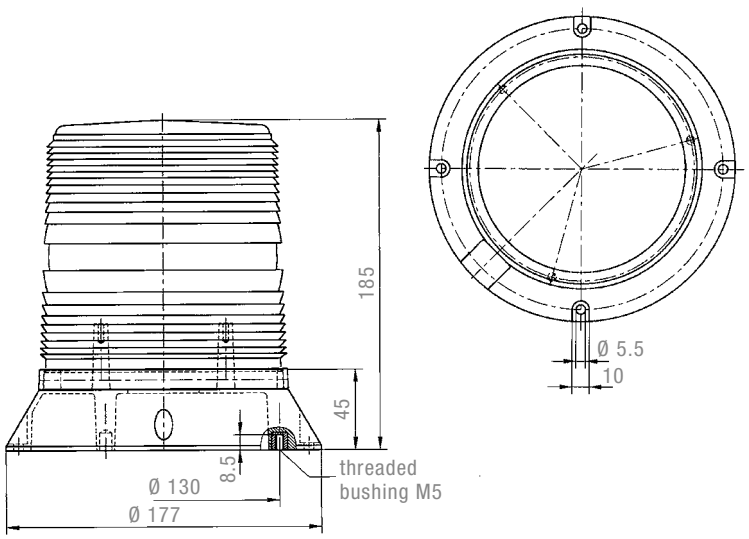

Drilling template 1 for M5 threaded bushing

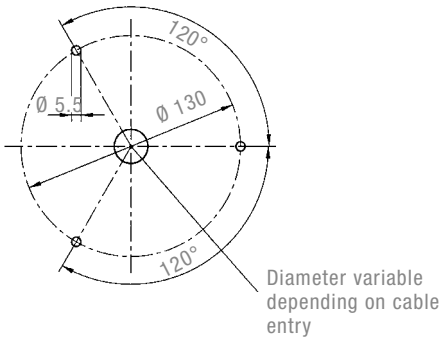

Drilling template 2

Two different drilling templates are available for fixing the light (direct mounting). M5x 8 threaded bushes are set into the base of the light for fixing according to drilling template 1. Drilling template 2 allows the light to be fixed using 4 through bolts or similar from above.

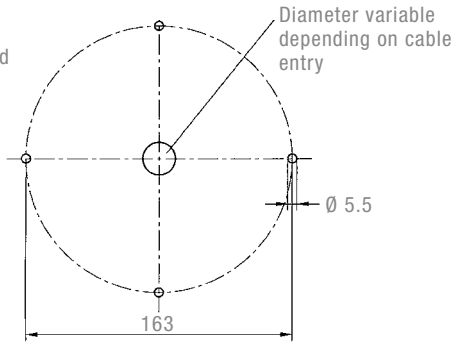

ARTICLE NO.	PMF 2015-SIL direct mounting		PMF 2015-SIL bracket mounting	
LENS COLOUR	230 V AC	24 V DC	230 V AC	24 V DC
	21007104601	21007804601	21007104611	21007804611
	21007105601	21007805601	21007105611	21007805611

Article numbers for other colours and voltages on request.

CONNECTION DIAGRAM

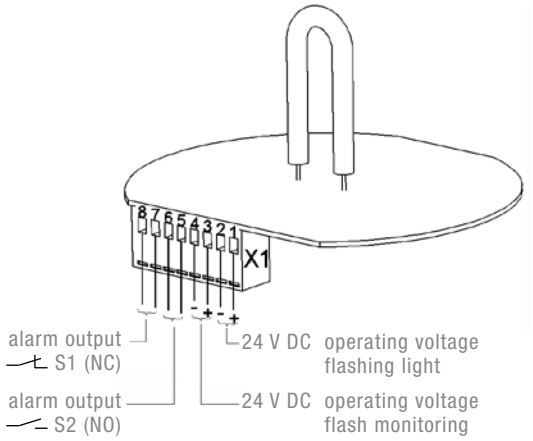

CONFORMITY TO STANDARDS

The visual characteristics of flashing lights conform to the European standard DIN EN 842; **“Machine safety – visual alarm signals”.**
Requirements contained in the DIN EN 981 standard; **“Machine safety – system of acoustic and visual alarm and information signals”,**
can be fulfilled.

The colours “red” for the emergency signal and “yellow” for the warning signal conform to the requirements of IEC 73 / DIN EN 60073 / VDE 0199; **“Coding of display devices and control elements using colours and supplementary means”.**

The visual alarms fulfill the requirements to the functional safety according to:

EN 61508	Functional safety of electrical/electronic/programmable electronic safety-related systems
EN 61511	Functional safety - Safety instrumented systems for the process industry sector

The devices can be used in safety related control systems in accordance with the following standards:

EN ISO 13849-1	Safety of machinery – Safety related parts of control systems – part 1
EN 62061	Safety of machinery – Functional safety of electrical/electronic/programmable electronic safety-related systems