sifam tinsley
PRECISION INSTRUMENTATION

MULTIFUNCTION METER
ND20LITE
www.sifamtinsley.co.uk

CE

DATASHEET Issue 2.0



Multifunction Meters
Transducers & Isolators
Temperature Controllers
Converters & Recorders
Digital Panel Meters
Current Transformers
Analogue Panel Meters
Shunts
Digital Multimeters
Clamp Meters
Insulation Testers

ND20LITE
METER OF NETWORK PARAMETERS

Features

- Measurement of power network parameters in 2,3 or 4- wire balanced and unbalanced systems.
- High accuracy class 0.2% on some measurements
- Indications considering values of programmed ratios
- Measurement of basic power quantities: UL-L, UL-N, In, f, P, Q, S, PF, tg , cos **φ**, **φ**, Ep+, Ep-, EqL, EqC, THD
- Programmable VT and CT ratio for Medium and Low Voltage applications
- User Programmable system type
- Universal Auxiliary supply
- Profile of 15, 30, 60-minutes' power
- Backlit LCD 3.5" screen
- Protection grade from the front window: IP65
- RS-485 interface (MODBUS)
- Configurable alarm and pulse outputs (energy)
- Configuration of displayed pages
- Free Configuration and monitoring software available (1 meter license).

SUBJECT TO CHANGE WITHOUT NOTICE
This manual superseded all previous versions – please keep for future reference

Features

eCon software | MOD BUS | Password protection | IP65 | THD | P,Q | PAord

Input

AC

Outputs

RS 485

Galvanic Isolation

Supply | RS 485

Example of Application

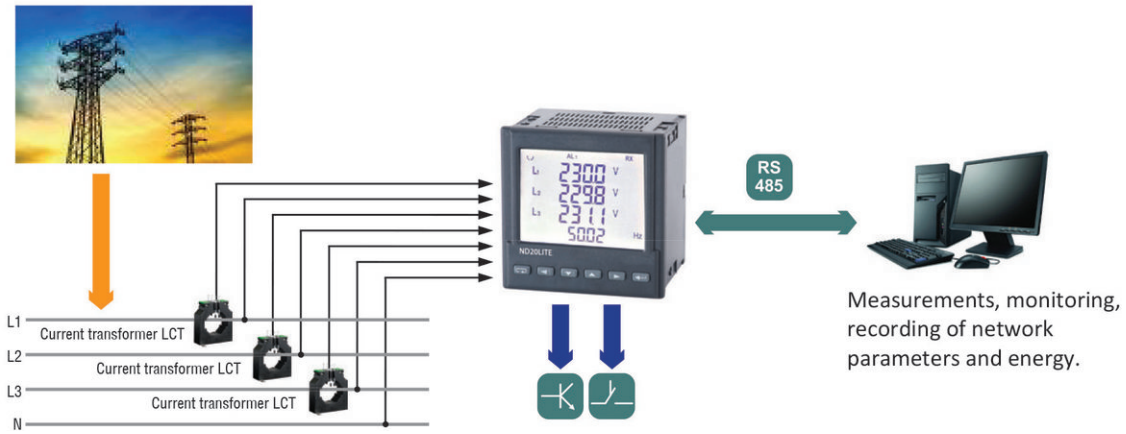

Measured Quantities and Measuring Ranges

Measured value		Indication range*	Measuring range	L1	L2	L3	Σ	Basic error
Current In	1 A 5 A	0.00 ... 12 kA 0.00 ... 60 kA	0.002 ... 1.200 A~ 0.010 ... 6.000 A~	•	•	•		±0.2% r
Voltage L-N	57,7 V 230 V	0.0 ... 280 kV 0.0 ... 1.104 MV	2.8 ... 70.0 V~ 11.5 ... 276 V~	•	•	•		±0.2% r
Voltage L-L	100 V 400 V	0.0 ... 480 kV 0.0 ... 1.92 MV	5 ... 120 V~ 20 ... 480 V~	•	•	•		±0.5% r
Frequency		47.0 ... 63.0 Hz	47.0 ... 63.0 Hz	•	•	•		±0.2% mv
Active power		-9999 MW ... 0.00 W ... 9999 MW	-1.65 kW ... 1.4 W ... 1.65 kW	•	•	•	•	±0.5% r
Reactive power		-9999 Mvar ... 0.00 var ... 9999 Mvar	-1.65 kvar ... 1.4 var ... 1.65 kvar	•	•	•	•	±0.5% r
Apparent power		0.00 VA ... 9999 MVA	1.4 VA ... 1.65 kVA	•	•	•	•	±0.5% r
Power factor PF		-1 ... 0... 1	-1 ... 0 ... 1	•	•	•	•	±1% r
Tangent φ		-1.2...0...1.2	-1.2 ... 0 ... 1.2	•	•	•	•	±1% r
Cosinus φ		-1... 1	-1 ... 1	•	•	•	•	±1% r
φ		-180 ... 180	-180 ... 180	•	•	•	•	±0.5% r
Imported active energy		0 ... 99 999 999.9 kWh					•	±0.5% r
Exported active energy		0 ... 99 999 999.9 kWh					•	±0.5% r
Reactive inductive energy		0 ... 99 999 999.9 kvarh					•	±0.5%
Reactive capacitive energy		0 ... 99 999 999.9 kvarh					•	±0.5%
THD	0 ... 100%	0 ... 100%		•	•	•		±5%

* Depending on the set tr_U ratio (ratio of the voltage transformer: 0.1...4000.0) and tr_I ratio (ratio of the current transformer: 1...10000)
r - of the range mv - of the measured value

Outputs

Kind of output	Properti es
Relay output	• programmable relay output, normally open voltageless contacts, load capacity 250 V~/0.5 A~
Pulse output of active or reactive energy	• 1 OC type, passive

Digital Interface

Interface type	Transmission protocol	Mode	Baud rate
RS-485	MODBUS RTU	8N2, 8E1, 8O1, 8N1	4.8; 9.6; 19.2; 38.4 kbit/s

External Features

Readout field	LCD 3.5" screen, specialized, monochromatic with backlit	
Weight	< 0.3 kg	
Overall dimensions	96 x 96 x 77 mm	panel cut-out: 92.5+0.6 x 92.5+0.6 mm
Protection grade (acc. to EN 60529)	from frontal side: IP65	from terminal side: IP20

Rated Operating Conditions

Supply voltage	85...253 V a.c., 90...300 V d.c.,	
Temperature	ambient: -25...23...55°C storage: -30...70°C	
Relative humidity	25...95% inadmissible condensation	
Operating position	any	
External magnetic field	0...40...400 A/m	
Short duration overload (1 s)	voltage input: 2Un (max. 1000 V)	current input: 10 In
Power consumption	- in the supply circuit≤ 6 VA, - in the voltage and current circuits ≤ 0.05 VA	

Safety and Compatibility Requirements

Electromagnetic compatibility	noise immunity	acc. to EN 61000-6-2
	noise emissions	acc. to EN 61000-6-4
Safety requirements		acc. to EN 61010-1

Electrical Connections

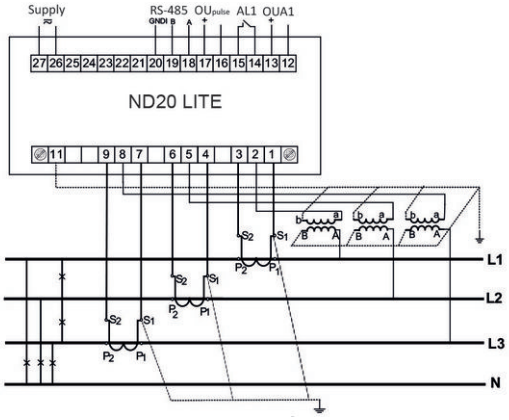

Connections:

- direct, semi-indirect and indirect one-phase measurement,
- direct measurement in a 3-wire network,
- semi-indirect measurement in a 3-wire network,
- indirect measurement with the use of 3 current transformers and 2 or 3 voltage transformers in a 3-wire network,
- direct measurement in a 4-wire network,
- semi-indirect measurement in a 4-wire network,
- indirect measurement with the use of 3 current transformers and 2 or 3 voltage transformers in a 4-wire network

Ordering ND20LITE -	X	X	X	XX	X	X
Current input In:						
1 / 5 A	2					
Voltage input (phase/ phase-to-phase) Un:						
3 x 57.7/100 V, 3 x 69.3/120 V, 3 x 230/400 V		2				
Supply voltage:						
85...253 V a.c., 90...300 V d.c.			1			
Version:						
standard				00		
custom-made*				XX		
Language:						
English					U	
other*					X	
Acceptance tests:						
with an extra quality inspection certificate						1
with calibration certificate						2
acc. to customer's request						X

* - after agreeing with the manufacturer

EXAMPLE OF ORDER:
The code **ND20LITE - 2 2 1 00 U 0 means:**

ND20LITE - meter of network parameters of ND20LITE type
2 - current input: 5A (X/5)
2 - input voltage (phase/phase-to-phase) Un = 3 x 230 V/ 400 V
1 - supply voltage: 85...253 V a.c./ 90...300 V d.c.
00 - standard version
U - all descriptions and user's manual in English
0 - without extra quality requirements

Contact

Sifam Tinsley Instrumentation Ltd

1 Warner Drive
Springwood Industrial Estate
Braintree, Essex
CM7 2YW

Tel: 01376 335271
E-mail: sales@sifamtinsley.com

www.sifamtinsley.co.uk