Datasheet

Thermocouple probe

SPJ612-I-20



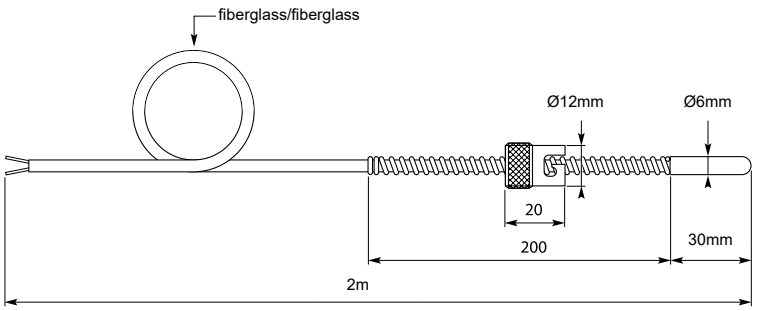

Part Number : SPJ612-I-20

Product description : Thermocouple sensor with Ø12 bayonet fastening baïonnette Ø12mm with 2 m cable

Product detail : Thermocouple sensor with Ø12 bayonet fastening baïonnette , class 1,
Setting spring length 200 mm, fiberglass with stainless steel braid braid cable length 2 meters. Maximum temperature 450°C, probe Ø6mm length 25mm.
Main use in plastic industrial to measuring mould temperature.

SPECIFICATIONS

Attribut	Value
Probe type :	Thermocouple J
Probe length :	30mm
Probe diameter :	6mm
Minimum Temperature Sensed :	-50°C
Maximum Temperature Sensed :	+450°C
Connection Type :	Câble
Cable Length :	2m
Probe Material :	Stainless steel 316L
Process Connection :	with bayonet adaptors
Accuracy :	Class 1

Thermocouple probe J

For bearing measurement in plastic industry

OPTIONS

- Other cable length or other bayonet on request



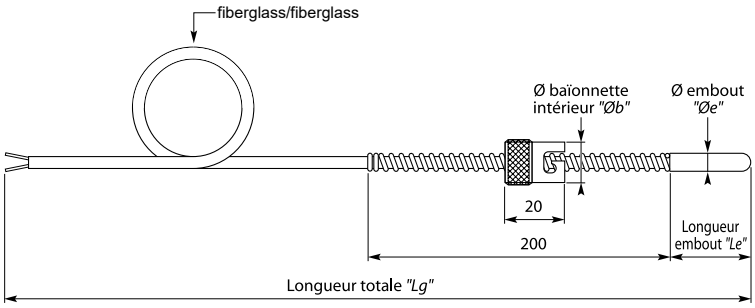

Probe :	thermocouple J IEC 584 class 1
Sheath :	316 L
Junction :	insulated or grounded
Process connection :	bayonet (2 pin) nickel brass plated, Øin 10 mm, 12 mm, 14 mm, 15 mm or 16 mm
Cable :	Fiberglass / fiberglass /Stainless steel braid 2 x 0.22 mm²
Maximum Temperature :	+450°C

Ref. SPJ — Sheath — Junction — "Lg"

"Øe" x "Le" (mm)	"Øb" (mm)	Sheath
5 x 25	10	510
6 x 30	10	610
6 x 30	12	612
8 x 30	14	814
8 x 30	15	815
8 x 30	16	816

Junction	
Insulated	I
Grounded	M

"Lg"	
2000 mm	20
3000 mm	30
4000 mm	40
5000 mm	50

Thermocouple probe J

With bayonet fastening in plastic industry

OPTIONS

- Othet cable length or other bayonet on request
- Bayonet adaptors



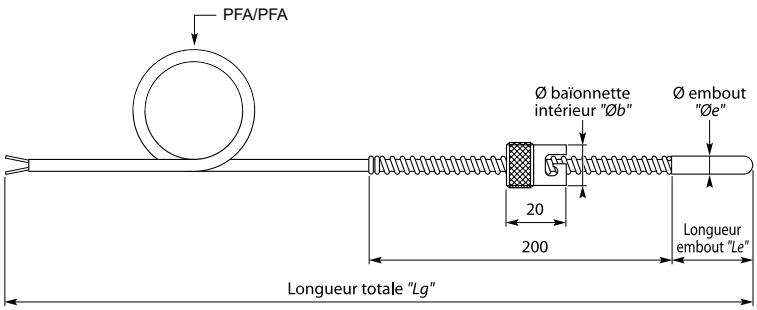

Probe :	thermocouple J IEC 584 class 1
Sheath :	316 L
Junction :	insulated or grounded
Process connection :	bayonet (2 pin) nickel brass plated, Øin 10 mm, 12 mm, 14 mm, 15 mm or 16 mm
Cable :	PFA/ braid /PFA, 2 x 0.22 mm²
Maximum Temperature :	250 °C

Ref. SPEJ — Sheath — Junction — "Lg"

"Øe" x "Le" (mm)	"Øb" (mm)	Sheath
5 x 25	10	510
6 x 30	10	610
6 x 30	12	612
8 x 30	14	814
8 x 30	15	815
8 x 30	16	816

Junction	
Insulated	I
Grounded	M

"Lg"	
2000 mm	20
3000 mm	30
4000 mm	40
5000 mm	50