HF3FA SUBMINIATURE HIGH POWER RELAY

c UL us
File No.: E134517

VDE
File No.: 40023708

CQC
File No.:CQC12002076529



Features

- 15A switching capability
- Flammability class according to UL94, V-0
- CTI 250 available
- Product in accordance to IEC 60335-1 available
- 1 Form A and 1 Form C configurations
- Subminiature, standard PCB layout
- UL insulation system: Class F
- Environmental friendly product (RoHS compliant)
- Outline Dimensions: (19.0 x 15.2 x 15.5) mm

CONTACT DATA

Contact arrangement	1A	1C	
		NO	NC
Contact resistance	100mΩ max.(at 1A 6VDC)		
Contact material	$AgSnO_2$		
Contact rating (Res. load)	10A 277VAC 10A 28VDC	10A 277VAC[1)] 10A 28VDC[1)]	5A 250VAC
Max. switching voltage	277VAC/28VDC		250VAC
Max. switching current	15A	10A	5A
Max. switching power	2770VA /280W		
Mechanical endurance	1×10^7 OPS		
Electrical endurance	H type:1×10^5 OPS (10A 250VAC Resistive load, Room temp., 1s on 9s off) Z type:5×10^4 OPS (NO: 5A/NC: 5A 250VAC, Resistive load, Room temp., 3s on 3s off)		

Notes: 1) Applicable when NC is not energized with load.

CHARACTERISTICS

Insulation resistance		100MΩ (at 500VDC)
Dielectric strength	Between coil & contacts	2500VAC 1min
	Between open contacts	750VAC 1min
Operate time (at nomi. volt.)		10ms max.
Release time (at nomi. volt.)		5ms max.
Shock resistance	Functional	98m/s²
	Destructive	980m/s²
Vibration resistance		10Hz to 55Hz 1.5mm DA
Humidity		5% to 85% RH
Ambient temperature		-40°C to 85°C
Termination		PCB
Unit weight		Approx. 7.0g
Construction		Plastic sealed, Flux proofed

Notes: 1) The data shown above are initial values.

COIL

Coil power	Approx. 360mW

COIL DATA at 23°C

Nominal Voltage VDC	Pick-up Voltage VDC max.	Drop-out Voltage VDC min.	Max. Voltage VDC *	Coil Resistance Ω
3	2.25	0.3	3.9	25 x (1±10%)
5	3.75	0.5	6.5	70 x (1±10%)
6	4.50	0.6	7.8	100 x (1±10%)
9	6.75	0.9	11.7	225 x (1±10%)
12	9.00	1.2	15.6	400 x (1±10%)
15	11.25	1.5	19.5	625 x (1±10%)
18	13.5	1.8	23.4	900 x (1±10%)
24	18.0	2.4	31.2	1600 x (1±10%)
48	36.0	4.8	54.4	6400 x (1±10%)

Notes: *Maximum voltage refers to the maximum voltage which relay coil could endure in a short period of time.

SAFETY APPROVAL RATINGS

UL/CUL	1 Form A	10A 250VAC at 85°C 8A 277VAC at 85°C 6A 250VAC at 105°C 15A 125VAC TV-5 120VAC
	1 Form C	NO/NC: 5A/5A 277VAC at 85°C
VDE	1 Form A	6A 250VAC at 105°C 10A 250VAC at 85°C
	1 Form C	NO: 10A 250VAC at 85°C NO: 6A 250VAC at 105°C NO/NC: 5A/5A 250VAC at 85°C

Notes: 1) All values unspecified are at room temperature.
2) Only typical loads are listed above. Other load specifications can be available upon request.
3) For sealed type, the vent-hole cover should be excised.

ORDERING INFORMATION

	HF3FA /	012	-H	S	T	F	(XXX)
Type							
Coil voltage	3, 5, 6, 9, 12, 18, 24, 48VDC						
Contact arrangement	**H**: 1 Form A	**Z**: 1 Form C					
Construction [1]	**S**: Plastic sealed	**Nil**: Flux proofed					
Contact material	**T**: $AgSnO_2$	**Nil**: AgCdO					
Insulation system	**F**: Class F						
Special code[3]	**XXX:** Customer special requirement	**Nil:** Standard					

Notes: 1) We recommend flux proofed types for a clean environment (free from contaminations like H_2S, SO_2, NO_2, dust, etc.).
We suggest to choose plastic sealed types and validate it in real application for an unclean environment (with contaminations like H_2S, SO_2, NO_2, dust, etc).
2) Contact is recommended for suitable condition and specifications if water cleaning or surface process is involved in assembling relays on PCB.
3) The customer special requirement express as special code after evaluating by Hongfa. e.g.(335) stands for product in accordance to IEC 60335-1 (GWT).

OUTLINE DIMENSIONS, WIRING DIAGRAM AND PC BOARD LAYOUT

Unit: mm

Outline Dimensions | PCB Layout (Bottom view) | Wiring Diagram (Bottom view)

1 Form A

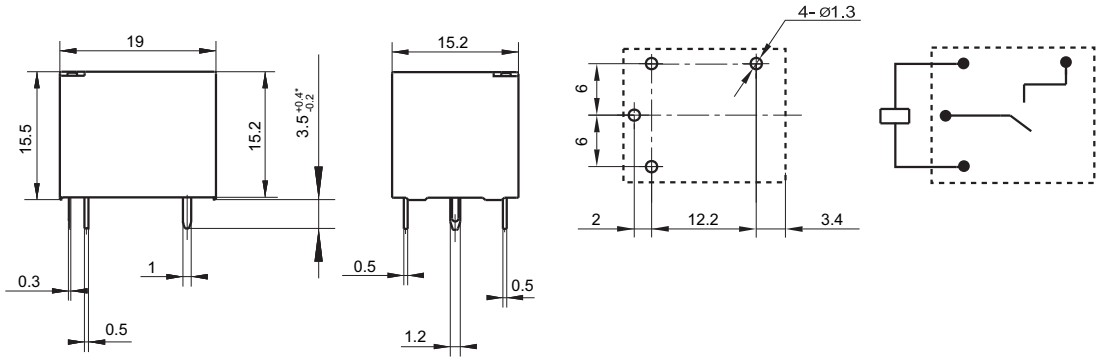

1 Form C

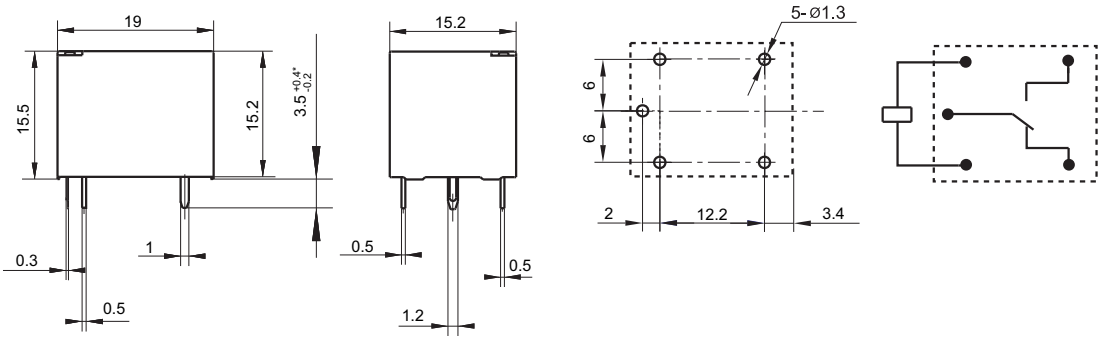

Remark: 1) * The additional tin top is max. 1mm.
2) In case of no tolerance shown in outline dimension: outline dimension ≤1mm, tolerance should be ±0.2mm; outline dimension >1mm and ≤5mm, tolerance should be ±0.3mm; outline dimension >5mm, tolerance should be ±0.4mm.
3) The tolerance without indicating for PCB layout is always ±0.1mm.

CHARACTERISTIC CURVES

MAXIMUM SWITCHING POWER

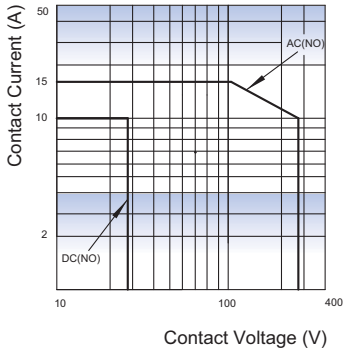

ENDURANCE CURVE

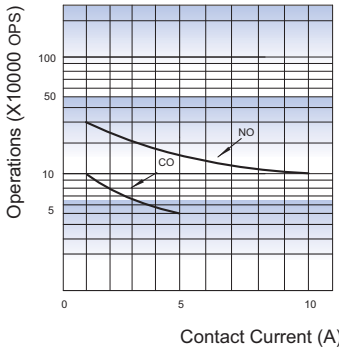

Test conditions:
NO: Resistive load, Flux proofed, Room temp., 1s on 9s off
CO:Resistive load, Flux proofed, Room temp., 3s on 3s off

COIL TEMPERATURE RISE

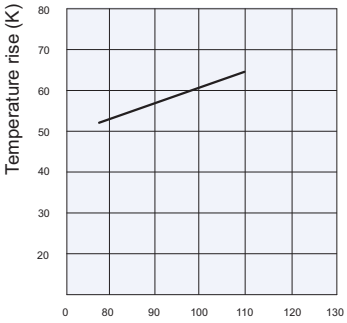

Test conditions: at 85˚C, 6A
Mounting distance: 10mm

Disclaimer

The specification is for reference only. See to "Terminology and Guidelines" for more information. Specifications subject to change without notice. We could not evaluate all the performance and all the parameters for every possible application. Thus the user should be in a right position to choose the suitable product for their own application. If there is any query, please contact Hongfa for the technical service. However, it is the user's responsibility to determine which product should be used only.

© Xiamen Hongfa Electroacoustic Co., Ltd. All rights of Hongfa are reserved.