Brand of NTN corporation

Technical data

ESFCE208

Bearing units



Grey cast housing, radial insert ball bearing with eccentric locking collar, single lip seal

KIT CONTENT

ES.208.G2, FCE208

VISUAL (S)

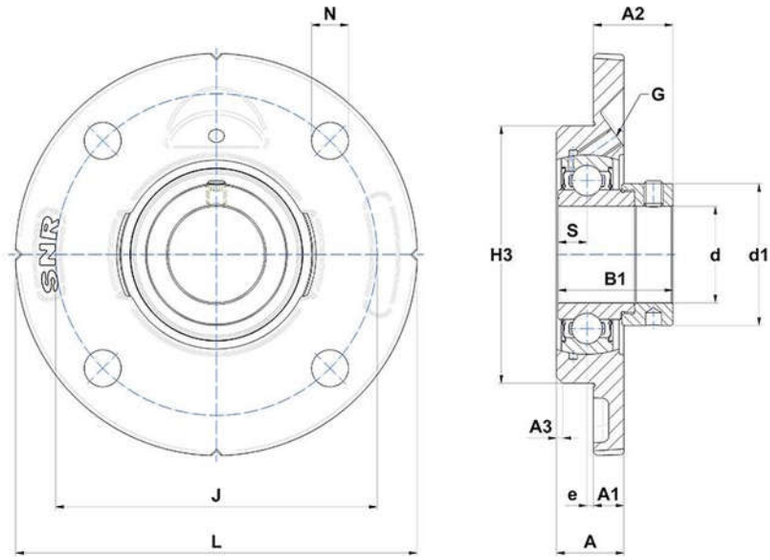

PRODUCT DEFINITION

Brand	SNR
A - Housing height	23 mm
A1 - Housing foot height / flange height	11,5 mm
A2 - Total height from mounting surface	31,7 mm
A3 - Centering depth / chamfer dimension	2 mm
B - Width of Inner Ring	30,2 mm

ESFCE208
Bearing units

PRODUCT DEFINITION	
B1 - Overall width Inner Ring	43,7 mm
d - Shaft diameter	40 mm
d1 - Outer dia of eccent. Lock. collar / nut of adapter sleeve	58 mm
e - Distance mounting surface to bearing center	-1 mm
G - Grease fitting	M6x1
H3 - Centering dia	100 mm
J - Mounting holes distance	120 mm
L - Housing width / diameter	145 mm
N - Mounting hole dimension	11,5 mm
S - Distance front side/bearing centre	11 mm

PRODUCT PERFORMANCE	
C - Dynamic load rating	29600000 mN
C0 - Static load rating	18200000 mN
Operating temperature min.	253,15 °K
Operating temperature max.	373,15 °K

OTHER FEATURES	
Mass	1,65 kg
Recommended tightening torque for set screw	11.5 N-m