Part Number: BU-46C-023Z
Description: Miniature Plier-Type Clip
1108

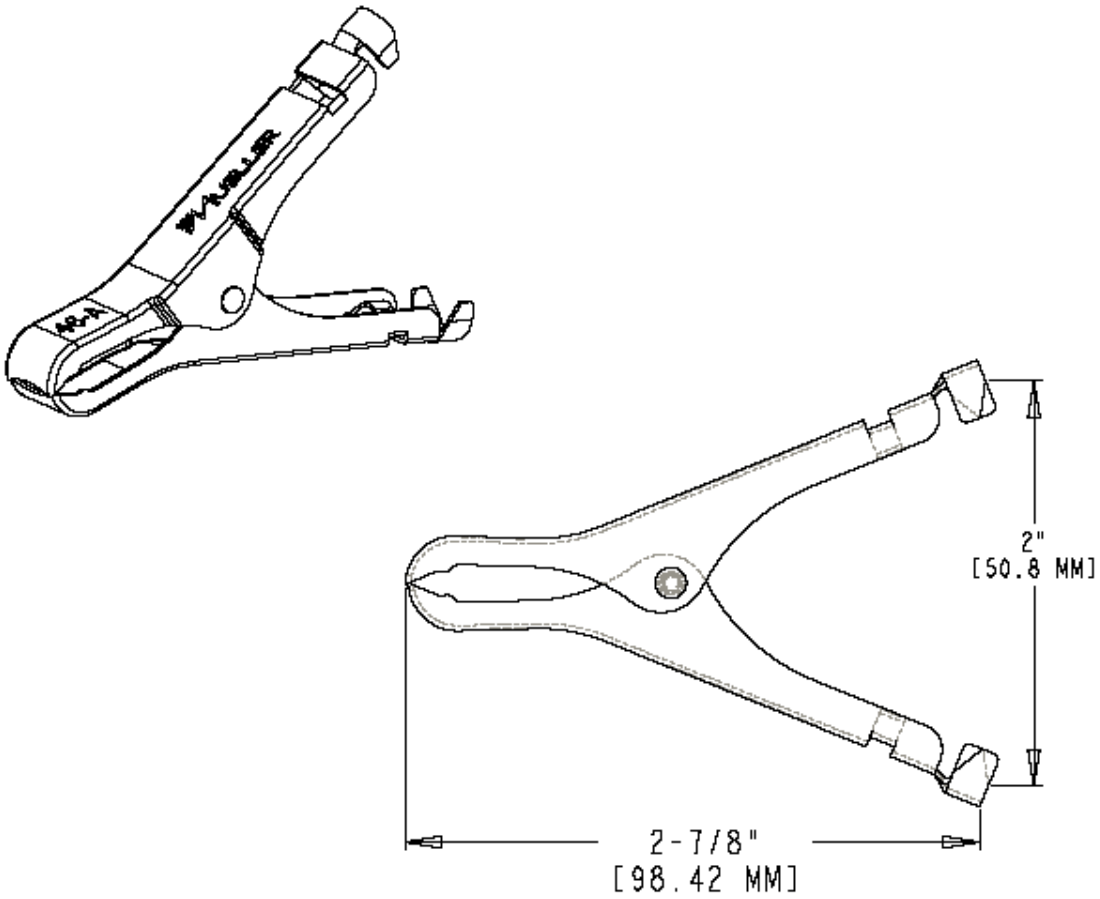

- Miniature Plier-Type Clip
- Solder or crimp connection
- Jaw opens 1.125” (28.6 mm) max
- Material: Burnish Copper
- Length: 2.88” (98.42 mm)
- Rating: 50 Amps
- RoHS Compliant

Mueller Electric Company
1625 E. 31st Street
Cleveland, Ohio 44114

ISO 9001:2000
Over 95 Years Of Innovation
www.muellerelectric.com

TEL. 800-955-2629
TEL. 216-771-5225
FAX. 216-771-3068