PPS1 RSIF - Parallel female thread valves with fittings for pipe



Description		
Reference	**For pipe OD (mm)**	**BSPP female thread**
PPS1 RSIF1612	16	G 1/2
PPS1 RSIF2012	20	G 1/2
PPS1 RSIF2527	25	G 3/4
PPS1 RSIF3234	32	G 1
PPS1 RSIF4042	40	G 1 1/4
PPS1 RSIF5049	50	G 1 1/2

Reference	For pipe OD (mm)	BSPP female thread
PPS1 RSIF6360	63	G 2
PPS1 RSIF8076	80	G 2 1/2

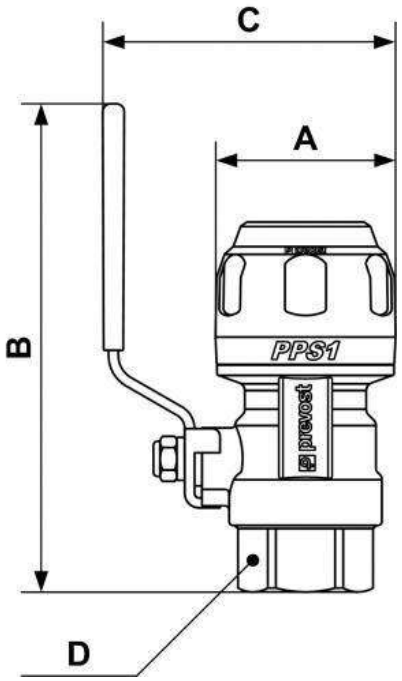

Dimensions				
Reference	**A mm**	**B mm**	**C mm**	**D mm**
PPS1 RSIF1612	32	121	64	25
PPS1 RSIF2012	38	121	66	25
PPS1 RSIF2527	46	125	75	31

Reference	A mm	B mm	C mm	D mm
PPS1 RSIF3234	57	151	85	40
PPS1 RSIF4042	68	157	99,10	49
PPS1 RSIF5049	84	204,5	122,5	55
PPS1 RSIF6360	100	235	285	
PPS1 RSIF8076	121	300	250	