Brand of NTN Group

Technical data

CUC209

Insert bearings



Cylindrical outer diameter, fixing by socket set screw, seal with slinger

VISUAL (S)

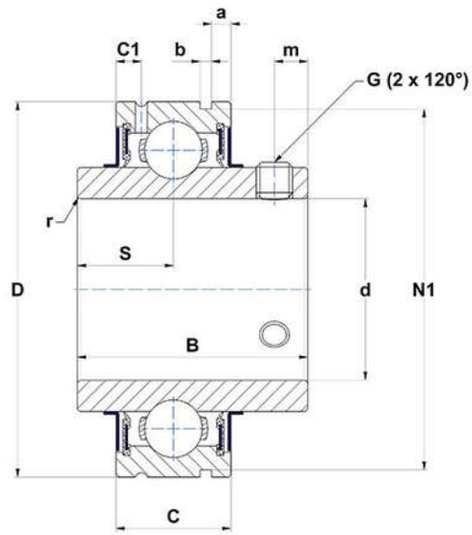

PRODUCT DEFINITION

Brand	SNR
a - Distance to grooves in OR	3,5 mm
b - Groove width in OR	1,9 mm
B - Width of Inner Ring	49,2 mm
C - Width of Outer Ring	22 mm
C1 - Distance center of OR to center of lubrication zone	5,1 mm
d - Shaft diameter	45 mm
D - Outer diameter of OR	85 mm

CUC209
Insert bearings

PRODUCT DEFINITION	
G - Set screw size	M8x1
m - Distance to set screw	8 mm
N1 - Groove dia in OR	81,81 mm
r - Radius Inner Ring	1.1
S - Distance front side/bearing centre	19 mm
f0 - Factor	14
SW - Wrench size	4 mm

PRODUCT PERFORMANCE	
C - Dynamic load rating	31850000 mN
C0 - Static load rating	20800000 mN
Operating temperature min.	253,15 °K
Operating temperature max.	373,15 °K

OTHER FEATURES	
Mass	0,68 kg
Recommended tightening torque for set screw	11.5 N-m

BEARING FREQUENCIES	
BPFO - Over rolling frequency on outer ring (60 rpm)	3.62076923076923 Hz
BPFI - Over rolling frequency on inner (60 rpm)	5.37923076923077 Hz
BSF - Over rolling frequency on rolling element (60 rpm)	4.92272562083586 Hz
BRF - Rotational frequency – rolling element (60 rpm)	2.46136281041793 Hz
FTF - Rotational frequency - cage (60 rpm)	0.402307692307692 Hz