INSTRUCTION & SERVICE MANUAL

MA112 / MA121 Marine Sounders

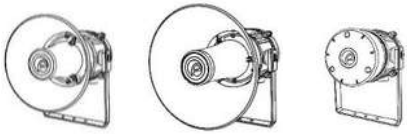

MA112F MA121F MA112R/MA121R

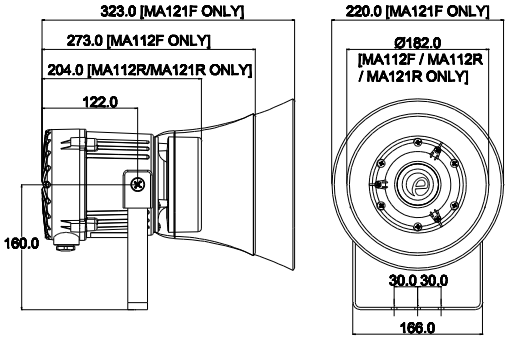

Sounder
45 Selectable tones
3 x Stage Switching
IP Rating: IP67/66 & Type 4/4X/13
Operating Temperature Range:
-25^{0}C to +55^{0}C
Unit Weight: 2.5Kg (DC), 3.0Kg (AC)
CE, EAC, Russian Maritime Register and GOST-P approved
M20 and/or ½" NPT Entries

Unit Type Code	Nominal Voltage	Voltage Range	Nominal Current
MA112FDC024/ MA112RDC024	24 V DC	10-30V DC	200mA
MA112FDC048/ MA112RDC048	48 V DC	35-60V DC	120mA
MA112FAC024/ MA112RAC024	24 V AC	24V +/-10% AC 50/60Hz	500mA
MA112FAC115/ MA112RAC115	115 V AC	115V +/-10% AC 50/60Hz	100mA
MA112FAC230/ MA112RAC230	230 V AC	230V +/-10% AC 50/60Hz	60mA
MA121FDC024/ MA121RDC024	24 V DC	10-30V DC	950mA
MA121FDC048/ MA121RDC048	48 V DC	35-60V DC	600mA
MA121FAC024/ MA121RAC024	24 V AC	24V +/-10% AC 50/60Hz	1000mA
MA121FAC115/ MA121RAC115	115 V AC	115V +/-10% AC 50/60Hz	240mA
MA121FAC230/ MA121RAC230	230 V AC	230V +/-10% AC 50/60Hz	120mA
MA121FDC240/ MA121RDC240	240 V DC	120 – 264 V DC	100mA @ 240V DC, (200mA @ 120V DC)

⚠ ***ATTENTION**: Installation must be carried out by an electrician in compliance with the latest codes and regulations.*

⚠ ***ATTENTION**: Disconnect from power source before installation or service to prevent electric shock.*



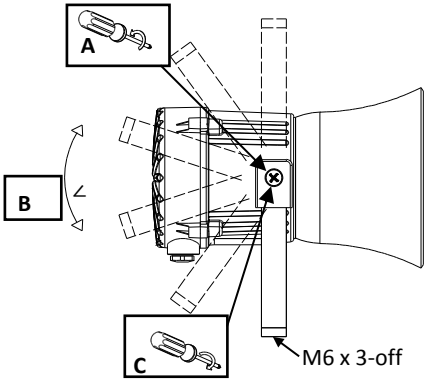

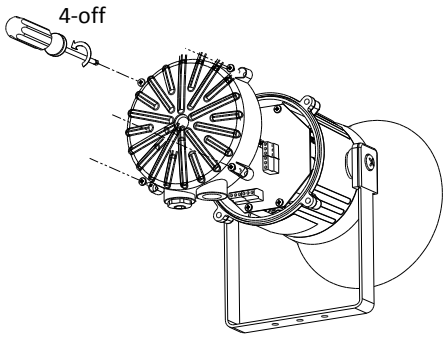

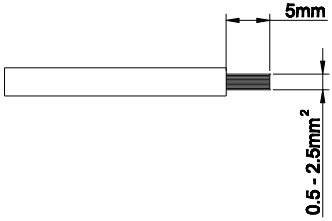

Strip cable 5mm.
Terminals accept cable 0.5-2.5mm^2
Use suitable cable glands with suitable IP rating

Optional End of Line Monitoring (DC Only)

DC Line Monitoring Resistor
(Recommended:
24V DC = MIN 3K9Ω, 0.5W or 1KΩ 2.0W
48V DC = MIN 15KΩ, 0.5W or 3K9Ω 2.0W)

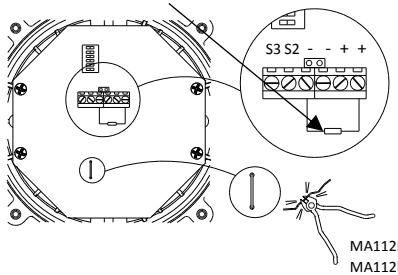

AC Units

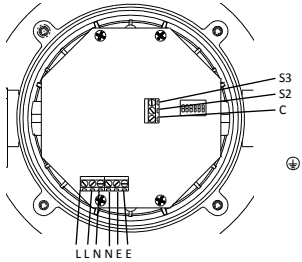

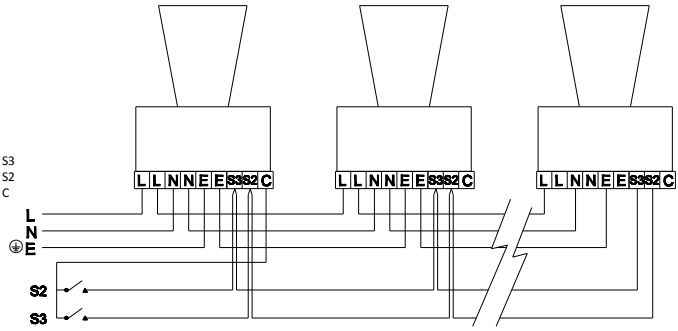

Customer Supplied Switches

DC Units (24V DC & 48V DC)

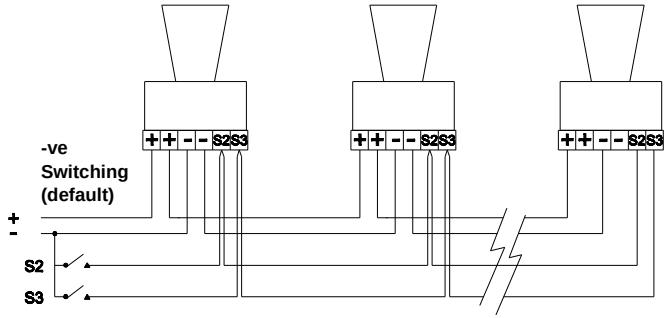

Customer Supplied Switches

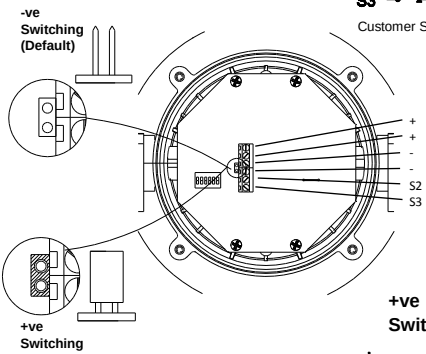

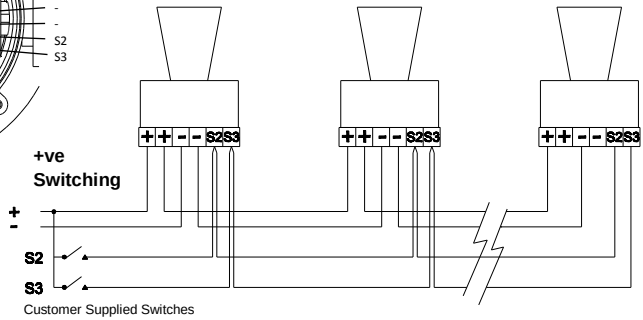

Customer Supplied Switches

DC Units (240V DC)

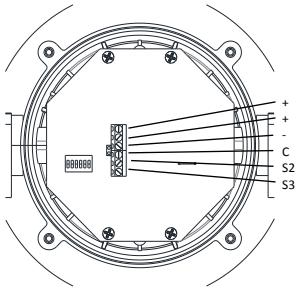

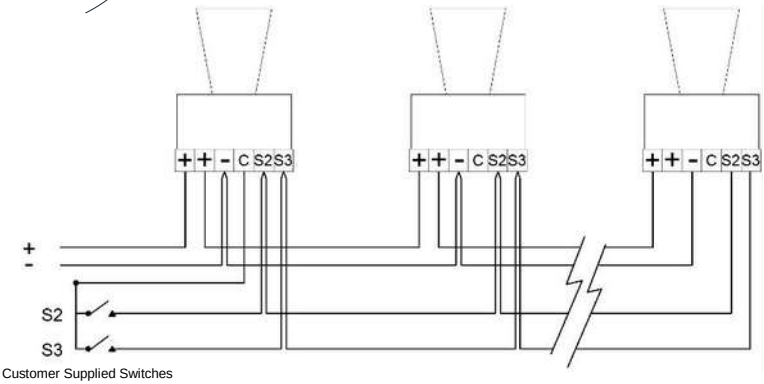

Customer Supplied Switches

AC Stage Switching

Stage one (S1) Operation	
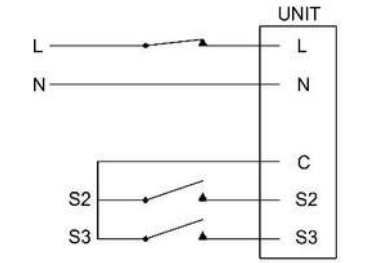	Simply connect the supply voltage to the L and N supply terminals.

Stage two (S2) Operation	
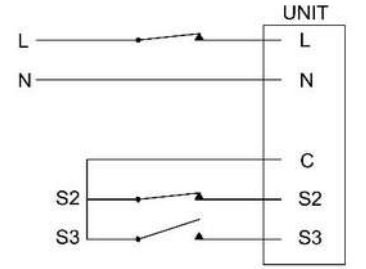	Power L and N, link the Common-C and S2 terminal.

Stage three (S3) Operation	
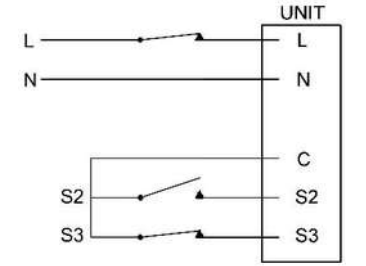	Power L and N, link the Common-C and S3 terminals.

DC Stage Switching (24V DC & 48V DC)

Stage one (S1) Operation	
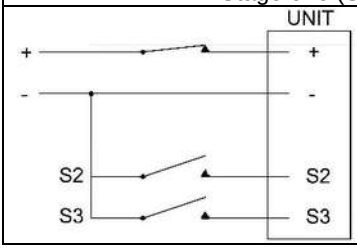	Simply connect the supply voltage to the + and - supply terminals.

DC Stage Switching (24V DC & 48V DC) (-ve switching)

Stage two (S2) Operation (-ve switching)	
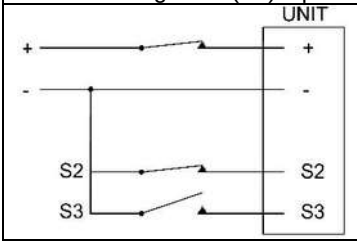	Power +ve and –ve, link a -ve supply line to the S2 terminal.

Stage three (S3) Operation (-ve switching)	
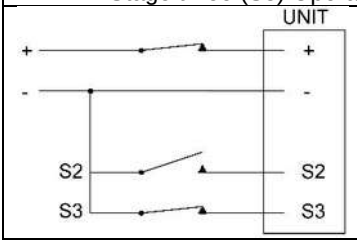	Power +ve and –ve, link a -ve supply line to the S3 terminal.

DC Stage Switching (24V DC & 48V DC) (+ve switching)

Stage two (S2) Operation (+ve switching)	
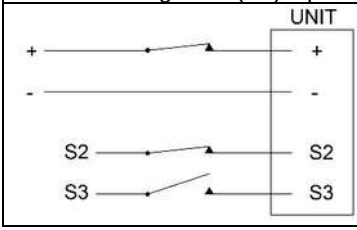	Power +ve and –ve, link a +ve supply line to the S2 terminal.

Stage three (S3) Operation (+ve switching)	
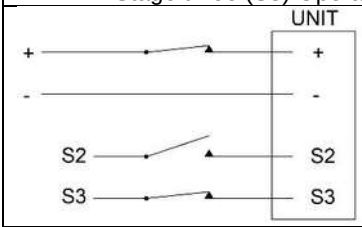	Power +ve and –ve, link a +ve supply line to the S3 terminal.

DC Stage Switching (240V DC)

Stage ONE (S1) Operation	
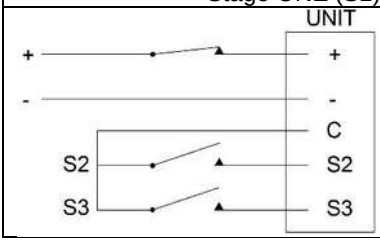	Simply connect the supply voltage to the + and - supply terminals.

Stage two (S2) Operation	
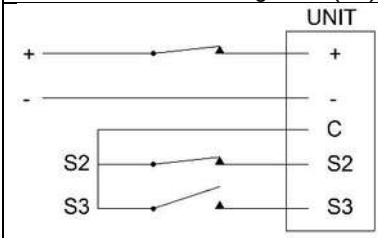	Power +ve and –ve, link between Common and the S2 terminal.

Stage three (S3) Operation	
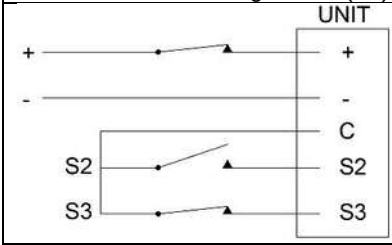	Power +ve and –ve, link between Common and the S3 terminal.

Tone Table – (Refer to 'Tone Selection' section)

Stage 1	Frequency Description	Db(A) @ 1m		Switch	Stage 2 (S2)	Stage 3 (S3)
		MA112	MA121	1 2 3 4 5 6		
Tone1	340Hz Continuous	107	113	0 0 0 0 0 0	Tone 2	Tone 5
Tone2	800/1000Hz @ 0.25 sec Alternating	112	121	1 0 0 0 0 0	Tone 17	Tone 5
Tone3	500/1200Hz @ 0.3Hz 0.5 sec Slow Whoop	113	121	0 1 0 0 0 0	Tone 2	Tone 5
Tone4	800/1000Hz @ 1Hz Sweeping	113	121	1 1 0 0 0 0	Tone 6	Tone 5
Tone5	2400HZ Continuous	119	125	0 0 1 0 0 0	Tone 3	Tone 20
Tone6	2400/2900Hz @ 7Hz Sweeping	116	123	1 0 1 0 0 0	Tone 7	Tone 5
Tone7	2400/2900Hz @ 1Hz Sweeping	116	125	0 1 1 0 0 0	Tone 10	Tone 5
Tone8	500/1200/500Hz @ 0.3Hz Sweeping	113	121	1 1 1 0 0 0	Tone 2	Tone 5
Tone9	1200/500Hz @ 1Hz - DIN / PFEER P.T.A.P	113	121	0 0 0 1 0 0	Tone 15	Tone 2
Tone10	2400/2900Hz @ 2Hz Alternating	119	126	1 0 0 1 0 0	Tone 7	Tone 5
Tone11	1000Hz @ 1Hz Intermittent	112	121	0 1 0 1 0 0	Tone 2	Tone 5
Tone12	800/1000Hz @ 0.875Hz Alternating	112	121	1 1 0 1 0 0	Tone 4	Tone 5
Tone13	2400Hz @ 1Hz Intermittent	119	125	0 0 1 1 0 0	Tone 15	Tone 5
Tone14	800HZ 0.25 sec on, 1 sec off Intermittent	113	120	1 0 1 1 0 0	Tone 4	Tone 5
Tone15	800Hz Continuous	113	120	0 1 1 1 0 0	Tone 2	Tone 5
Tone16	660Hz 150ms on, 150ms off Intermittent	109	118	1 1 1 1 0 0	Tone 18	Tone 5
Tone17	544Hz (100ms)/440Hz (400ms) - NF S 32-	109	117	0 0 0 0 1 0	Tone 2	Tone 27
Tone18	660Hz 1.8 sec on, 1.8 sec off Intermittent	109	118	1 0 0 0 1 0	Tone 2	Tone 5
Tone19	1.4Khz-1.6Khz 1s, 1.6Khz-1.4Khz 0.5s - NFC48-265	114	126	0 1 0 0 1 0	Tone 2	Tone 5
Tone20	660Hz Continuous	109	118	1 1 0 0 1 0	Tone 2	Tone 5
Tone21	554/440Hz @ 1Hz Alternating	109	118	0 0 1 0 1 0	Tone 2	Tone 5
Tone22	544Hz @ 0.875 sec Intermittent	109	118	1 0 1 0 1 0	Tone 2	Tone 5
Tone23	800Hz @ 2Hz Intermittent	113	120	0 1 1 0 1 0	Tone 6	Tone 5
Tone24	800/1000Hz @ 50Hz Sweeping	112	120	1 1 1 0 1 0	Tone 29	Tone 5
Tone25	2400/2900Hz @ 50Hz Sweeping	116	124	0 0 0 1 1 0	Tone 29	Tone 5
Tone26	Bell	108	118	1 0 0 1 1 0	Tone 2	Tone
Tone27	6554Hz Continuous	109	117	0 1 0 1 1 0	Tone 26	Tone 5
Tone28	440Hz Continuous	106	117	1 1 0 1 1 0	Tone 2	Tone 5
Tone29	800/1000Hz @ 7Hz Sweeping	112	121	0 0 1 1 1 0	Tone 7	Tone 5
Tone30	300Hz Continuous	107	114	1 0 1 1 1 0	Tone 2	Tone 5
Tone31	660/1200Hz @ 1Hz Sweeping	112	121	0 1 1 1 1 0	Tone 26	Tone 5
Tone32	Two Tone Chime	108	118	1 1 1 1 1 0	Tone 26	Tone 15
Tone33	745Hz @ 1Hz Intermittent	109	116	0 0 0 0 0 1	Tone 2	Tone 5
Tone34	1000 & 2000Hz @ 0.5 sec Alternating -	114	121	1 0 0 0 0 1	Tone 38	Tone 45
Tone35	420Hz @ 0.625 sec Australian Alert	108	118	0 1 0 0 0 1	Tone 36	Tone 5
Tone36	500-1200Hz 3.75 sec / 0.25 sec Australian	113	121	1 1 0 0 0 1	Tone 35	Tone 5
Tone37	1000Hz Continuous - PFEER Toxic Gas	112	121	0 0 1 0 0 1	Tone 9	Tone 45
Tone38	2000Hz Continuous	116	122	1 0 1 0 0 1	Tone 34	Tone 45
Tone39	800HZ 0.25 sec on, 1 sec off Intermittent	113	120	0 1 1 0 0 1	Tone 23	Tone 17
Tone40	544Hz (100ms)/440Hz (400ms) - NF S 32-	112	121	1 1 1 0 0 1	Tone 31	Tone 27
Tone41	Motor Siren - Slow Rise to 1200Hz	113	122	0 0 0 1 0 1	Tone 2	Tone 5
Tone42	Motor Siren - Slow Rise to 800Hz	114	121	1 0 0 1 0 1	Tone 2	Tone 5
Tone43	1200Hz Continuous	113	122	0 1 0 1 0 1	Tone 2	Tone 5
Tone44	Motor Siren - Slow Rise to 2400Hz	118	124	1 1 0 1 0 1	Tone 2	Tone 5
Tone45	1KHz 1s on, 1s off Intermittent - PFEER	112	121	0 0 1 1 0 1	Tone 38	Tone 34

Tone Selection

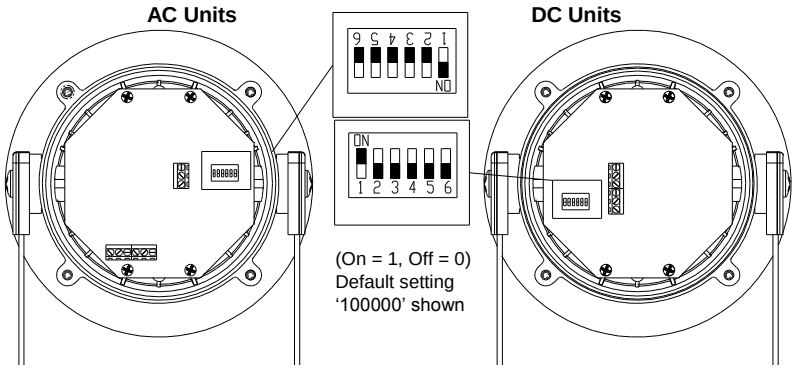

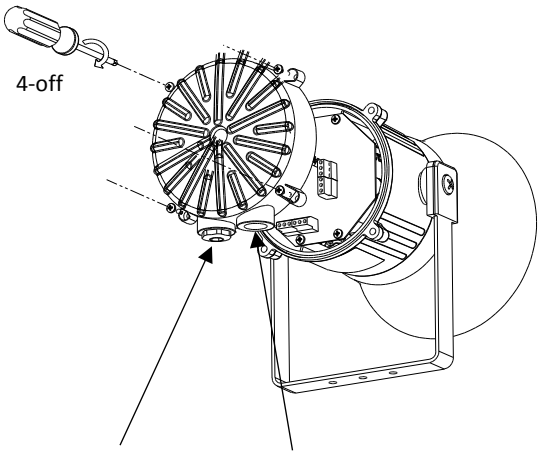

Order code	Entry Type	Entry Type	Stopping Plugs Provided
MA112FAC230[**A**]	M20	½" NPT	1-off M20 & 1-off ½" NPT
MA112FAC230[**B**]	M20	M20	1-off M20 only
MA112FAC230[**C**]	½" NPT	½" NPT	1-off ½" NPT only