theben-timer 26 Article number: 0260030

Description



- Analogue plug-in timer
- 1 channel
- Daily program
- 96 switching segments
- Shortest switching time: 15 minutes
- Without power reserve
- Synchronised with mains
- Use with earthed sockets
- Switching preselection
- Switching status display

Technical data

Operating voltage	230 V AC
Frequency	50 Hz
Number of channels	1
Installation type	Plug-in
Type of connection	Plug-in
Program	Daily program
Switching capacity at 250 V AC, cos φ = 1	16 A
Switching capacity at 250 V AC, cos φ = 0,6	4 A
Shortest switching times	15 min
Programmable every	15 min
Time accuracy at 25 °C	Synchronised with mains
Type of contact	NO contact
Number of switching segments	96
Stand-by consumption	~0,8 W
Test approval	VDE
Housing and insulation material	High-temperature resistant, self-extinguishing thermoplastic
Type of protection	IP 20
Protection class	II according to EN 60 730-1
Ambient temperature	-40 °C … +55 °C

Connection example

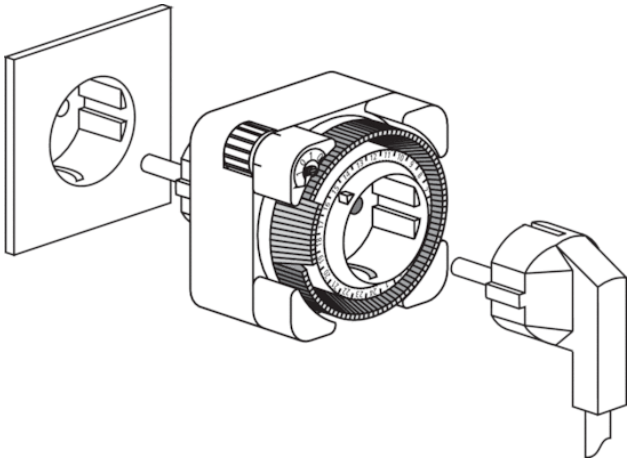

Scale drawings

