Features/Benefits

- *Easy X, Y coding on single side PCB*
- *Positive/ smooth tactile feedback*
- *High temperature*
- *Wide variety of colors & styles*
- *Illuminated versions available*
- *RoHS compliant and compatible*

Typical Applications

- *Video*
- *Electronic games*
- *Appliances*



Construction

FUNCTION: momentary
CONTACT ARRANGEMENT: 1 make contact (SPST), NO
DISTANCE BETWEEN BUTTON CENTERS, MIN.: 12,7 (0.500)
TERMINALS: PC pins

Electrical

	Non-Illuminated	Illuminated
SWITCHING POWER MAX.:	3 VA	0.35 VA
SWITCHING VOLTAGE MAX.:	32 V DC	35 V DC
SWITCHING CURRENT MAX.:	100 mA DC	10 mA DC
OPERATING LIFE with max. switching power:	Version F1: 250 000 operations Version F2: 100 000 operations	Version F1: 100 000 operations Version F2: 30 000 operations
CONTACT RESISTANCE:	≤100 mΩ	≤200 mΩ
DIELECTRIC STRENGTH (50 Hz / 1 min):	250 V	
INSULATION RESISTANCE:	$\geq 10^8\ \Omega$	
BOUNCE TIME:	≤10 ms	

Mechanical

	Non-Illuminated	Illuminated
SWITCHING TRAVEL:	Version F1: 0.2 mm ≤ Te ≤ 1.0 mm Version F2: 0.3 mm ≤ Te ≤ 1.1 mm	0.4 mm ≤ Te ≤ 0.8 mm
OPERATING FORCE:	Version F1: 0.8N ≤ Fa ≤1.8N Version F2: 2.0N ≤ Fa ≤ 3.5N	Version F1: 0.8N ≤ Fa ≤1.8N Version F2: 1.5N ≤ Fa ≤ 2.5N
SEALING:	IP40	

Environmental

	Non-Illuminated	Illuminated
OPERATING TEMPERATURE:	-20°C to 85°C	-20°C to 60°C

Process

SOLDERABILITY:

Wave soldering, compatible with lead free soldering profile
Hand soldering, 350°C for 3 seconds

Packaging

The D6 switches are delivered in boxes containing 10 trays with 250 pieces each:
Total 2,500 pieces per box.
The D6 buttons are delivered in bulk with 2500 pieces per box.

D6
SPST Momentary Key Switches

How To Order

Our easy build-a-switch concept allows you to mix and match options to create the switch you need. To order, select desired option from each category and place it in the appropriate box.

NON-ILLUMINATED

Switch

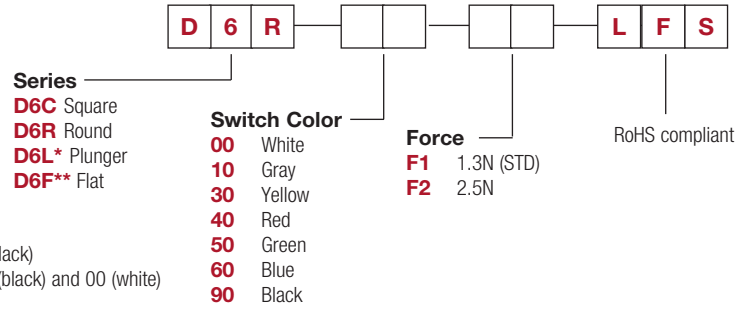

*Available only in color 90 (black)
** Available only in color 90 (black) and 00 (white)

Button

Buttons can be ordered separately
Shipped in bulk

D6 button for use with D6C only

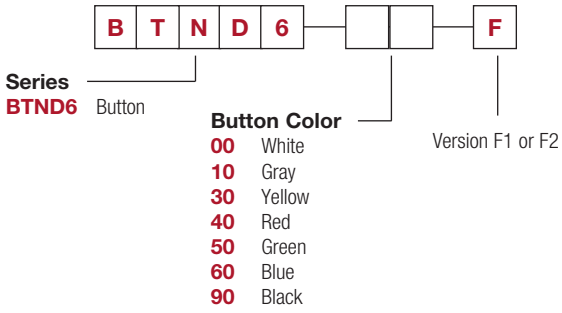

ILLUMINATED

Switch

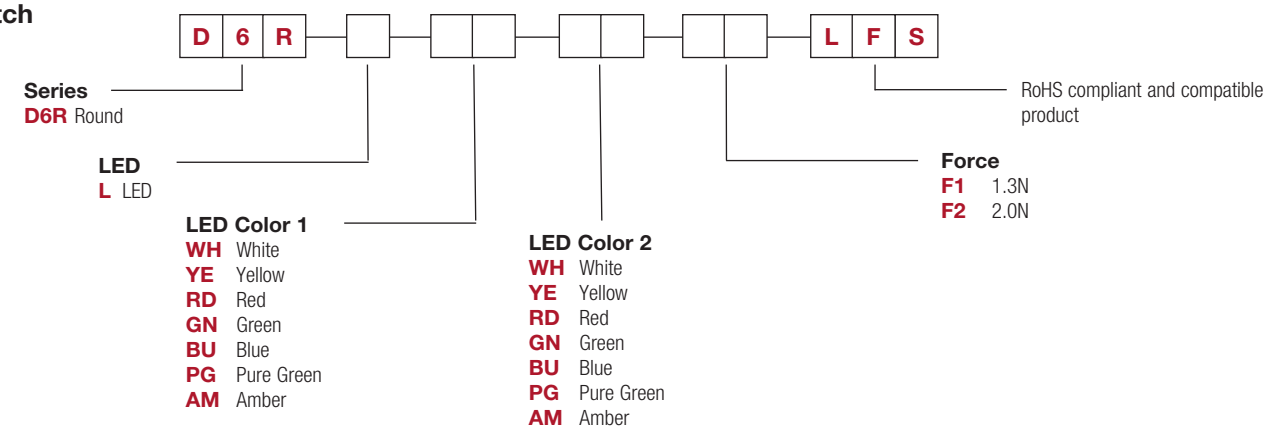

SERIES

D6C



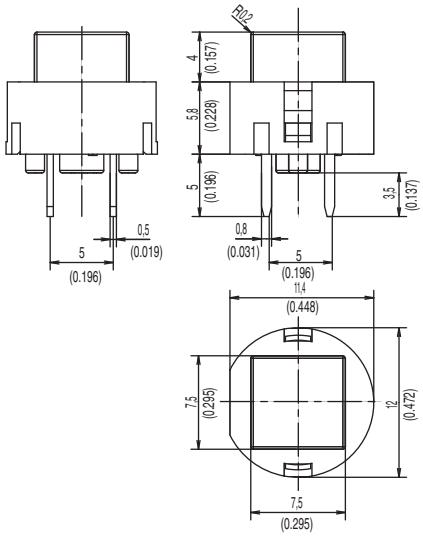

D6R



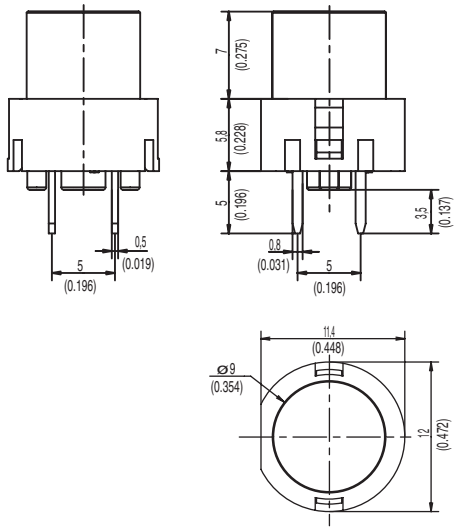

D6L ONLY AVAILABLE IN BLACK



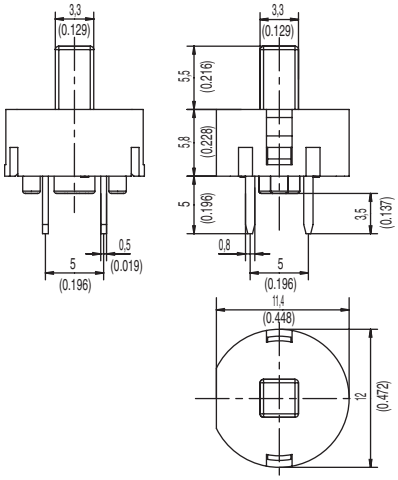

D6F



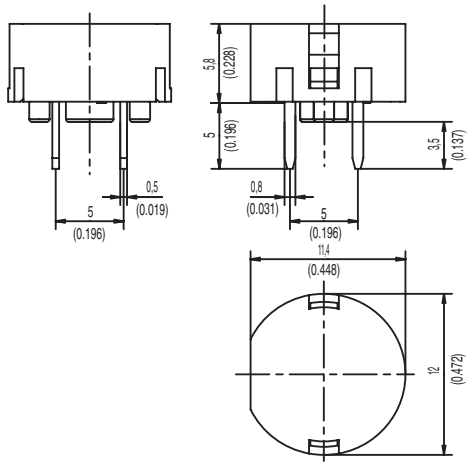

First Angle Projection

Dimensions are shown: mm
Specifications and dimensions subject to change

D6
SPST Momentary Key Switches

PCB LAYOUT

Switch (Non-Illuminated)

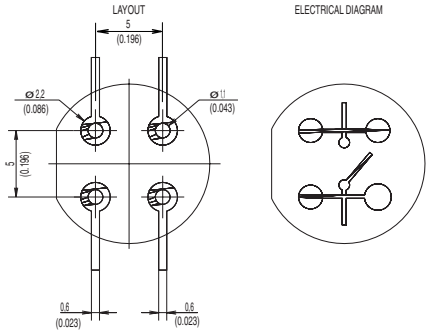

Switch (Illuminated)

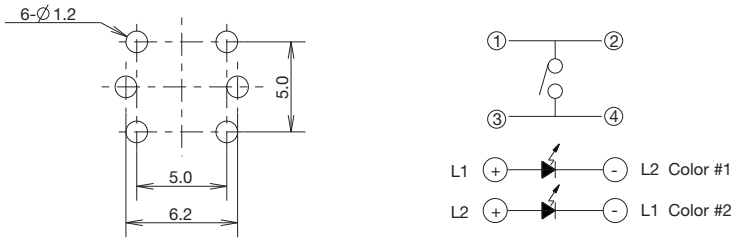

P.C.B LAYOUT

ELECTRICAL SCHEMATIC

BUTTON AVAILABLE

BTND6 Buttons must be ordered separately. Shipped in bulk.

NOTE: Only compatible with D6C



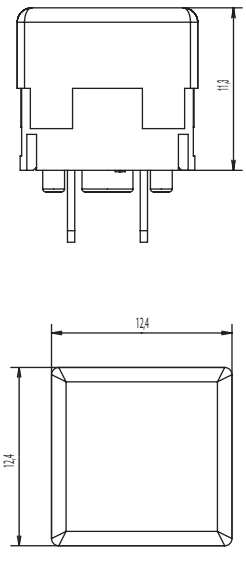

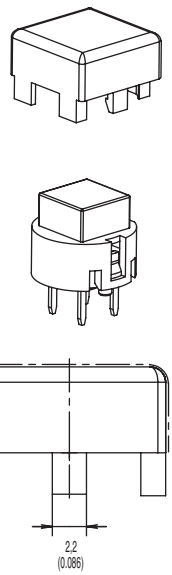

OPTION CODE	BUTTON COLOR
00	WHITE
10	GRAY
30	YELLOW
40	RED
50	GREEN
60	BLUE
90	BLACK

First Angle Projection

Dimensions are shown: mm
Specifications and dimensions subject to change