

Retroreflective sensor

RLK28-55-Z/31/116

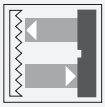

- Universal series with highly versatile fields of use
- Resistant against noise: reliable operation under all conditions
- Programmable time function GAN, GAB, IAB, as well as GAN-GAB and GAN-IAB as double function
- Version with red light
- Version with relay output

Retroreflective sensor with polarization filter

Function

The series 28 family of sensors can be universally used. It has a large range of models that allows it to be integrated into any automation environment. The sensors are contained in sturdy water resistant plastic housings with multiple fastening options and scratch resistant optical cover. Features such as a timer function, and functions including a light/dark switch, sensitivity adjuster and highly visible status LEDs make for less effort on the part of the user and streamline installation, setup and operation. Just about any task associated with positioning, moving, conveying and monitoring can be accomplished with these sensors.

Release date: 2020-12-10 Date of issue: 2020-12-10 Filename: 134130_eng.pdf

Dimensions

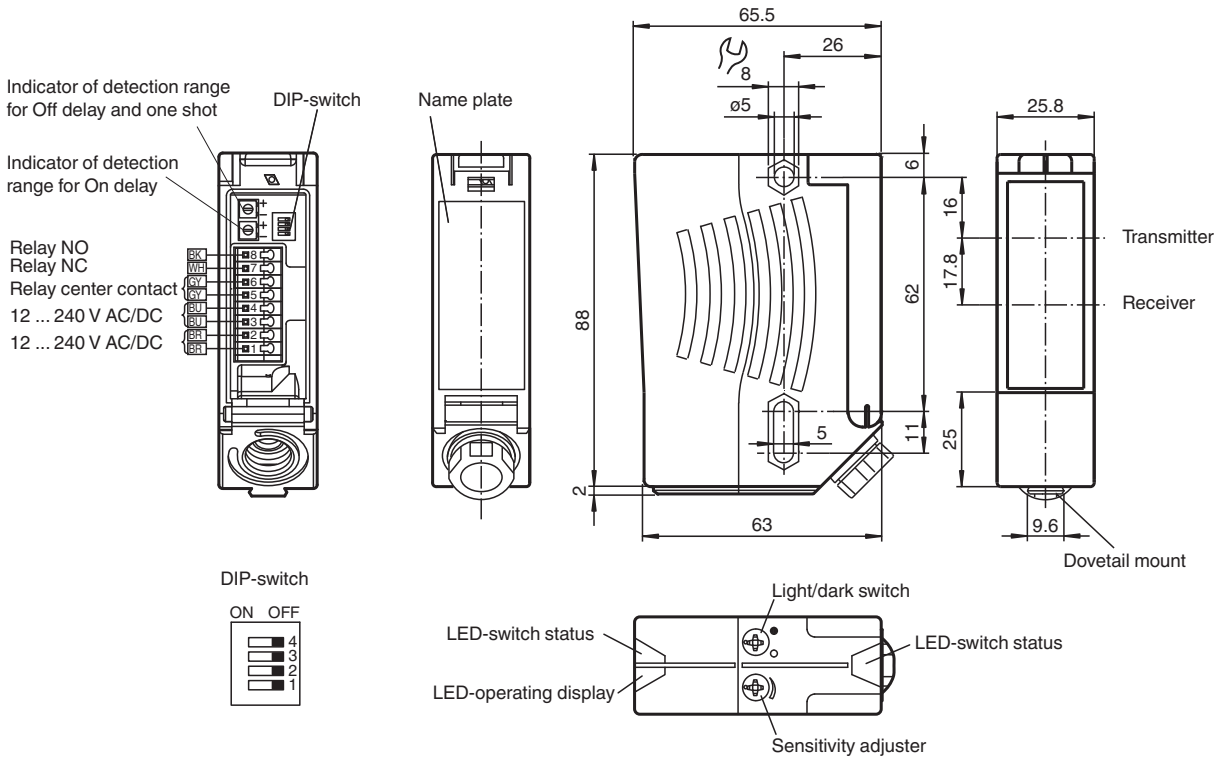

Technical Data

General specifications	
Effective detection range	0 ... 17 m
Reflector distance	0.05 ... 17 m
Threshold detection range	21 m
Reference target	H85-2 reflector
Light source	LED
Light type	modulated visible red light
Polarization filter	yes
Diameter of the light spot	approx. 290 mm at a distance of 17 m
Angle of divergence	emitter 1.2° receiver 2°
Ambient light limit	80000 Lux
Functional safety related parameters	
$MTTF_d$	600 a
Mission Time (T_M)	20 a
Diagnostic Coverage (DC)	0 %
Indicators/operating means	
Operation indicator	LED green
Function indicator	2 LEDs yellow, light up when light beam is free, flash when falling short of the stability control, off when light beam is interrupted
Control elements	sensitivity adjustment (Adjustment to < 25% of the effective operating range) , Light-on/dark-on changeover switch
Electrical specifications	

Release date: 2020-12-10 Date of issue: 2020-12-10 Filename: 134130_eng.pdf

Technical Data

Operating voltage	U_B	12 ... 240 V AC/DC
Power consumption	P_0	≤ 3.5 VA
Output		
Switching type		light/dark on switchable
Signal output		Relay, 1 alternator
Switching voltage		max. 250 V AC/DC
Switching current		max. 2 A
Switching power		DC: max. 50 W AC: max. 500 VA
Switching frequency	f	25 Hz
Response time		20 ms
Timer function		ON delay (GAN), OFF delay (GAB), one shot (IAB), ON delay-one shot (GAN-IAB), ON delay-OFF delay (GAN-GAB), programmable adjustment interval 0.1 ... 10 s
Conformity		
Product standard		EN 60947-5-2
Approvals and certificates		
EAC conformity		TR CU 020/2011 TR CU 004/2011
Protection class		II, rated insulation voltage ≤ 250 V AC with pollution degree 1-2 according to IEC 60664-1 Output circuit insulated from control circuit in accordance with IEC 61140. Caution! The protection class 2 is only valid when the terminal compartment is closed.
UL approval		E87056 , cULus Listed **Caution:** This equipment is considered as open-type equipment. It must be mounted within an enclosure, that is suitably designed for protection against internal fire and personal injury resulting from accessibility to live parts according UL 508.
CCC approval		Certified by China Compulsory Certification (CCC)
Ambient conditions		
Ambient temperature		-40 ... 60 °C (-40 ... 140 °F)
Storage temperature		-40 ... 75 °C (-40 ... 167 °F)
Mechanical specifications		
Housing width		25.8 mm
Housing height		88 mm
Housing depth		65.5 mm
Degree of protection		IP67
Connection		terminal compartment with 8 spring-loaded terminals for wire cross section 0.5 ... 1.5 mm^2 , Insulation stripping 7.5 ... 8.5 mm , M16 x 1.5 cable gland
Material		
Housing		Plastic ABS
Optical face		Plastic pane
Mass		112 g

Release date: 2020-12-10 Date of issue: 2020-12-10 Filename: 134130_eng.pdf

Connection Assignment

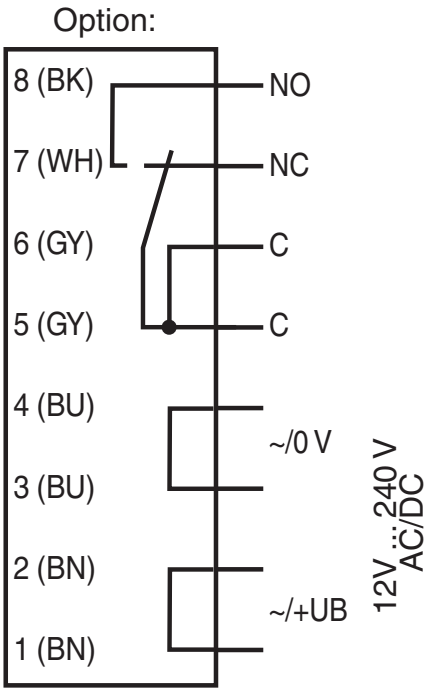

The relay-functions "NC" and "NO" bear on the switching mode "Dark-ON".
This complies to the default setting of the light/dark switch (factory setting).

Characteristic Curve

Characteristic response curve

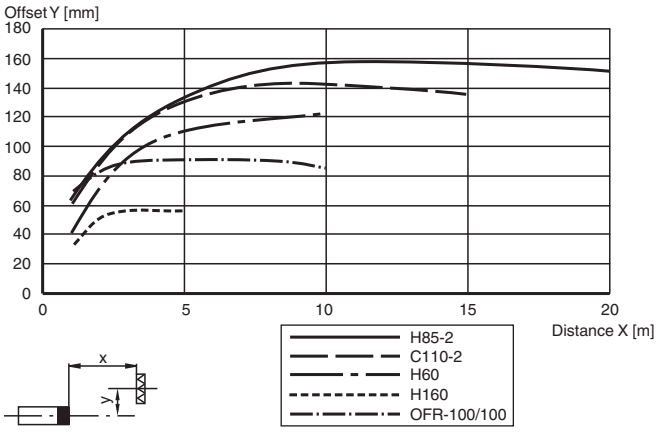

Release date: 2020-12-10 Date of issue: 2020-12-10 Filename: 134130_eng.pdf

Relative received light strength

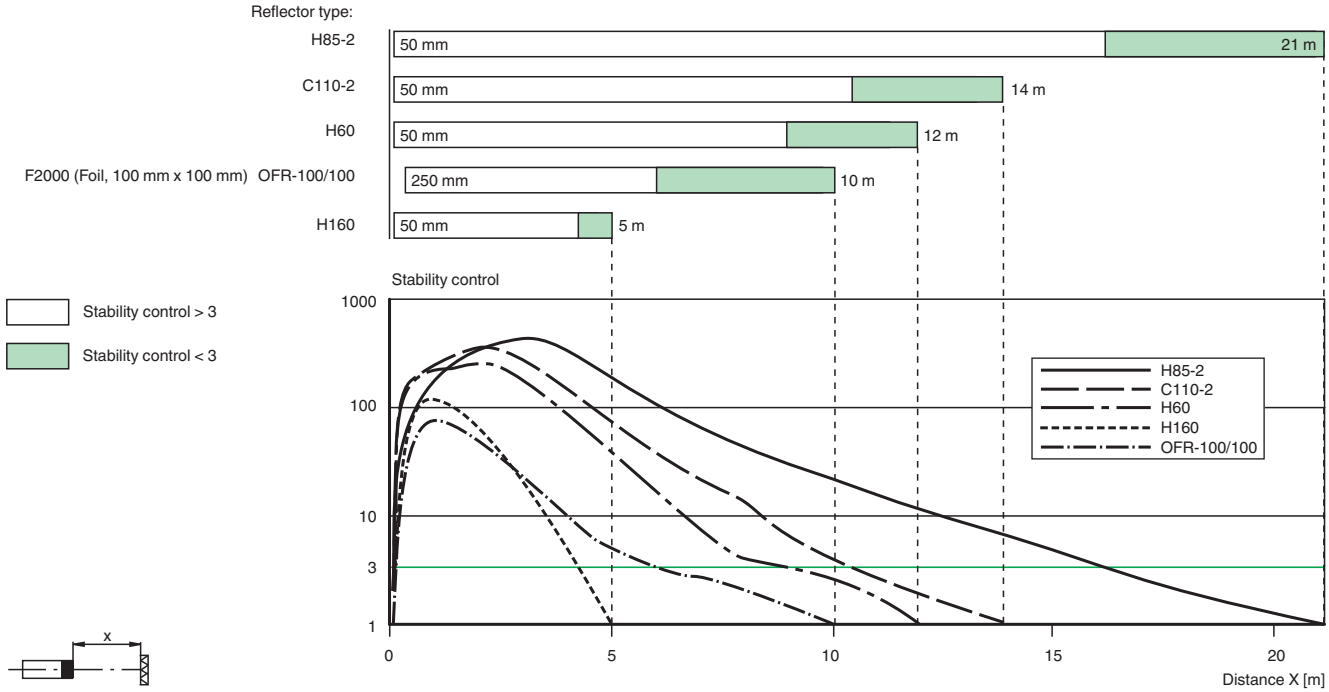

Application



Accessories

	**OMH-05**	Mounting aid for round steel ø 12 mm or sheet 1.5 mm ... 3 mm
	**OMH-21**	Mounting bracket
	**OMH-22**	Mounting bracket
	**OMH-RLK29**	Mounting bracket
	**OMH-RLK29-HW**	Mounting bracket for rear wall mounting

Release date: 2020-12-10 Date of issue: 2020-12-10 Filename: 134130_eng.pdf

Accessories

	**OMH-RL28-C**	Weld slag cover model

Release date: 2020-12-10 Date of issue: 2020-12-10 Filename: 134130_eng.pdf

Timer functions

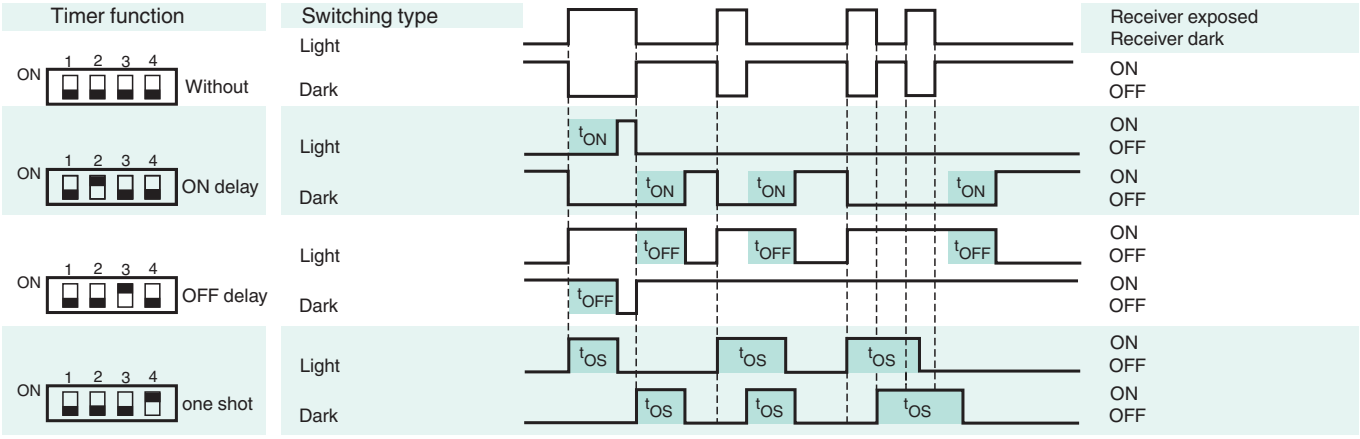

Time t_{ON}, t_{OFF} and t_{OS} are adjustable from 0.1 to 10 seconds.
The Light-/Dark-Switch (Left, outer switch) is shown in the "Dark ON" position.

Type	Description	Notes
-Z	OFF delay timer	Adjustable time interval (0.1 s - 10 s)
	one shot timer	
	ON delay timer	
	ON delay timer / OFF delay timer	
	ON delay timer / one shot timer	

Accessories

Other suitable accessories can be found at www.pepperl-fuchs.com

Application

- Object tracking in material handling, and the packaging sector
- Material flow monitoring
- Bin occupancy check in storage technology
- Fine positioning in high-bay warehouses
- Presence and height monitoring on pallet conveyors
- Single-beam protection for automatic industrial gates and elevator doors
- Protection at automatic gates

Release date: 2020-12-10 Date of issue: 2020-12-10 Filename: 134130_eng.pdf