Your Expert Partner for **Human Machine Interfaces**

Actuator

Distribution by
Rs-online

22-
040.001

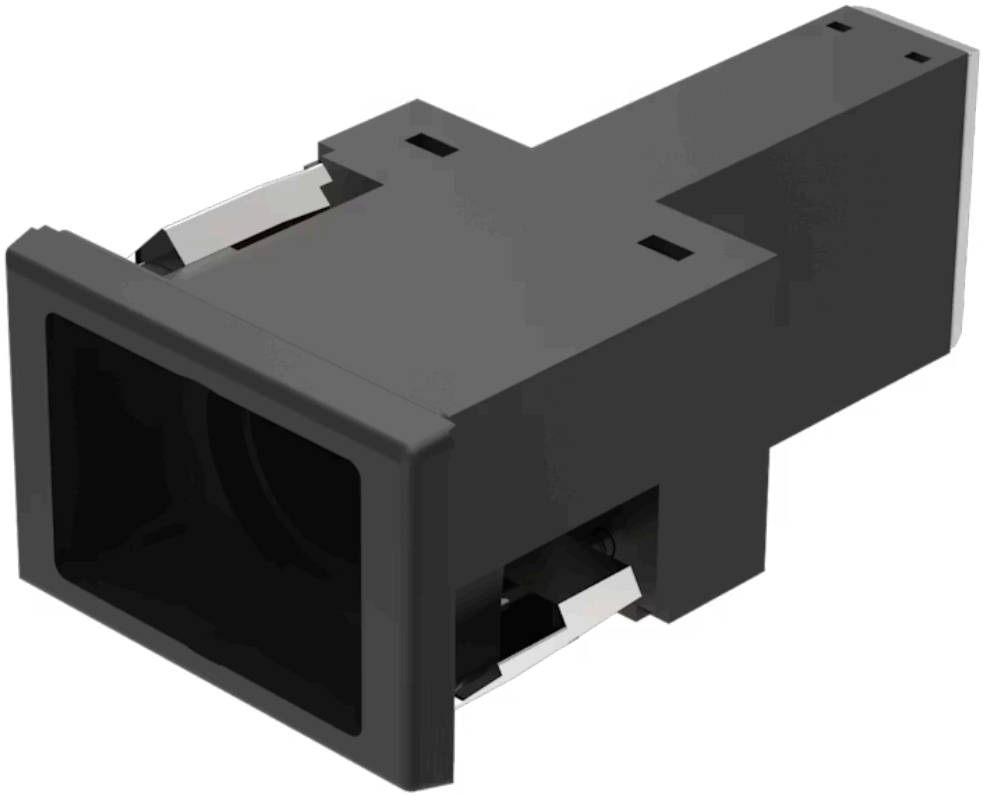

https://rs-online.eao.com/component/22-040.00...

Your product:



22-040.001
Actuator

FRONT

Front dimension:	36 mm x 24 mm
Front form:	Rectangular

MOUNTING

Design:	Flush
Mounting cut-out:	22 mm x 30 mm
Mounting type:	Panel mounting

MECHANICAL CHARACTERISTICS

Terminal:	Screw terminal
Weight:	0.024 kg

AMBIENT CONDITION

Operating temperature:	– 25 °C ... + 55 °C

CERTIFICATE

REACH:	REACH compliant
RoHS:	RoHS compliant

OTHER

Short Description:	Actuator, 22 mm x 30 mm, 36 mm x 24 mm, Rectangular, Screw terminal
Wiring diagrams:	

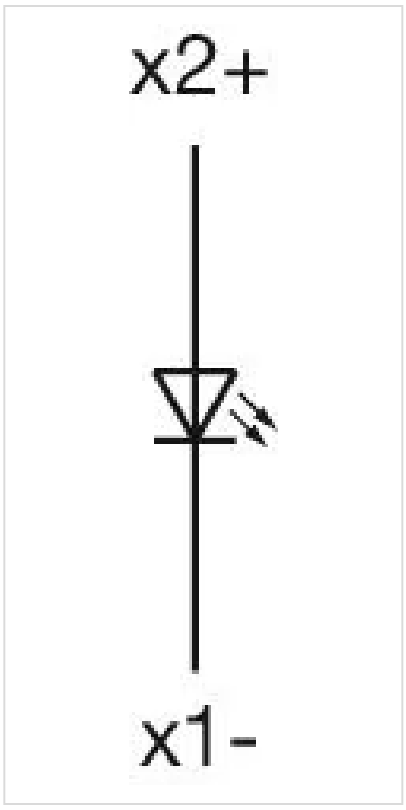

Mounting cut-outs:

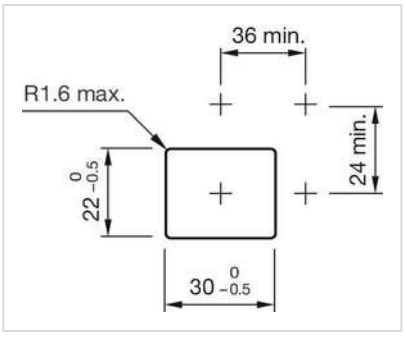

Dimension drawings:

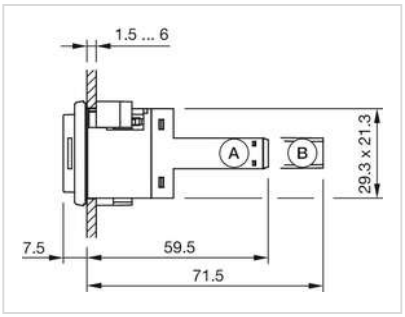

A = Screw terminal
B = Plug-in terminal 6.3 mm x 0.8 mm