FLOAT AND THERMOSTATIC STEAM TRAPS
FLT 17
(DN 1"HC – DN 25HC)

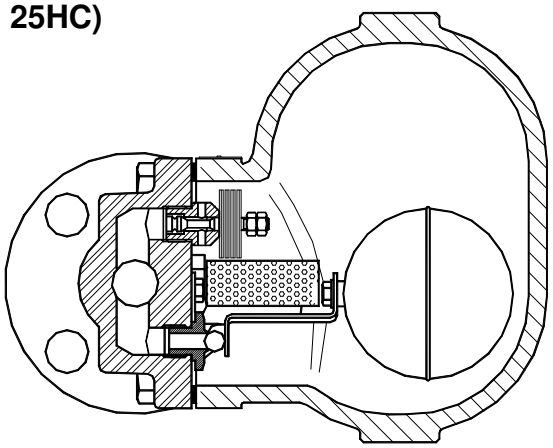

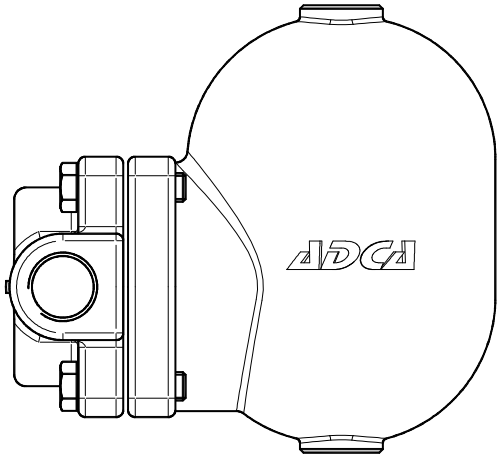

DESCRIPTION

FLT17 float and thermostatic (integral air vent) steam traps series are designed for all types of low and high pressure steam heating and process equipment.
Typical applications include unit heaters, heat exchangers, driers, jacketed vessels and all the applications where continuous drainage is essential.
Connections are female screwed or flanged for horizontal or vertical installation.

MAIN FEATURES

Modulating discharge.
Discharges condensate at steam temperature.
Unaffected by sudden or wide load and pressure changes.
Excellent air discharge (by thermostatic air vent).

OPTIONS:	SLR – steam lock release Equalizing plug or vent connection Internal strainer
USE:	Saturated and superheated steam.
AVAILABLE MODELS:	FLT17-4,5 , 10 and 14
SIZES:	DN 1"HC – DN25HC
CONNECTIONS:	Female screwed ISO7/1 Rp (BS21) Flanged EN 1092-2 PN16 or ANSI
INSTALLATION:	Standard horizontal installation – From left to right FLT17 (L-R)

Upon request:
-horizontal installation with the flow from right to left (R-L)
-vertical installation with the flow from top to bottom (V)

MAX. DIFFERENTIAL PRESSURE

FLT17HC-4,5 : 4,5 bar
FLT17HC-10 : 10 bar
FLT17HC-14: 14 bar

BODY LIMITING CONDITIONS		
FLANGED PN16*	FLANGED ANSI 150 **	RELATED TEMP.
ALLOW. PRES.	ALLOW. PRES.	
16 bar	15,4 bar	100 ºC
15,5 bar	14,6 bar	150 ºC
14,7 bar	13,8 bar	200 ºC
13,9 bar	12,1 bar	250 ºC

PMO - Max. operating pressure 14 bar
TMO - Max. operating temperature 198 ºC
* According to EN1092-2:2000 ; ** Acc. to EN1759-1:2004
Body limiting conditions PN16 or below, depending on the type of connection adopted. Rating PN16 for thread.

FLOW RATE CAPACITY IN Kgs/h														
MODEL	SIZE	DIFFERENTIAL PRESSURE (bar)												
		0,5	1	1,5	2	3	4,5	6	7	8	9	10	12	14
FLT17-4,5	1"-25HC	900	1250	1450	1700	2010	2400							
FLT17-10	1"-25HC	450	620	790	880	1100	1250	1500	1600	1700	1750	1800		
FLT17-14	1"-25HC	340	435	530	600	610	850	990	1100	1190	1240	1300	1350	1380

We reserve the right to change the design and material of this product without notice.
Produced in accordance with Article 3, paragraph 3 of the PED - European Pressure Equipment Directive - 97/23/EC. IS 1.345 E 06.08

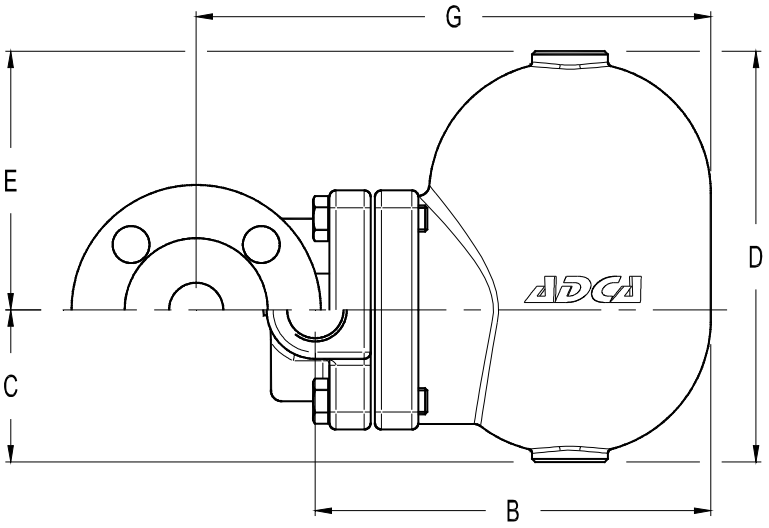

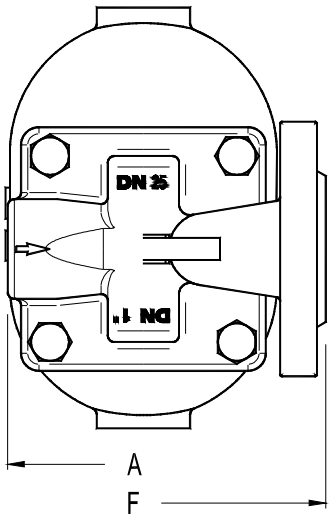

DIMENSIONS (mm)												
Screwed							EN PN16			ANSI 150		
SIZE DN	A	B	C	D	E	WGT. Kgs	F	G	WGT. Kgs	F	G	WGT. Kgs
25-1"	120	195	80	190	110	9	160	248	11,3	160	248	10,9

On request can be supplied an alternative version DN 32 - 11/4" with different lengths: A = 190 and F = 230 mm

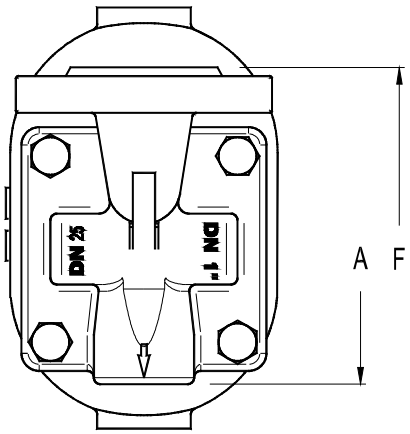

Vertical Installation (V)

MATERIALS		
POS.Nr.	DESIGNATION	MATERIAL
1	Body	GJS-400-15 / 0.7040
2	Cover	GJS-400-15 / 0.7040
3	*Gasket	Stainless st. / Graphite
4	*Seat	AISI 410 / 1.4006
5	*Valve	AISI 440C / 1.4125
6	*Lever	AISI 304 / 1.4301
7	*Float	AISI 304 / 1.4301
8	*Air vent	Stainless st. (Bimetallic)
9	Bolts	Steel 8.8
10	**Strainer	AISI 304 / 1.4301

*Available spare parts ; ** Optional

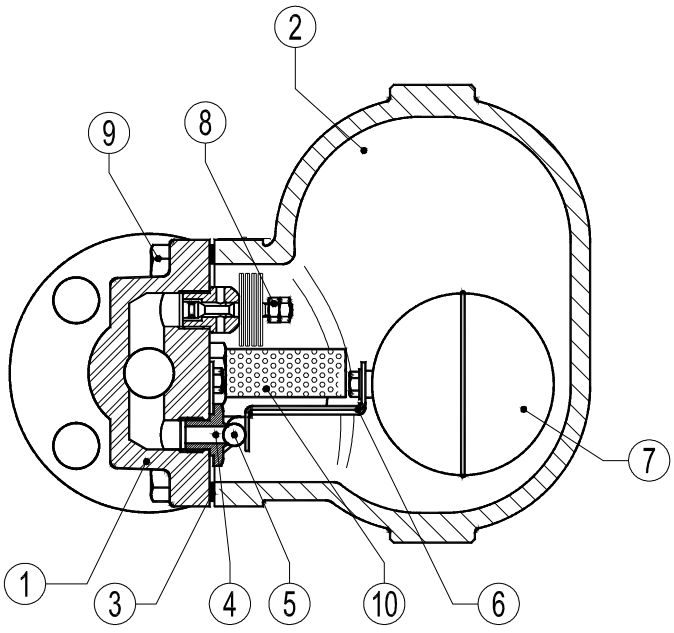

We reserve the right to change the design and material of this product without notice.