LR3020

Continuous level sensor (guided wave radar)

LR0000--BR34AMDKG/US

For high process temperatures: The temperature at the process connection is decisive. The actual medium temperature may be higher.

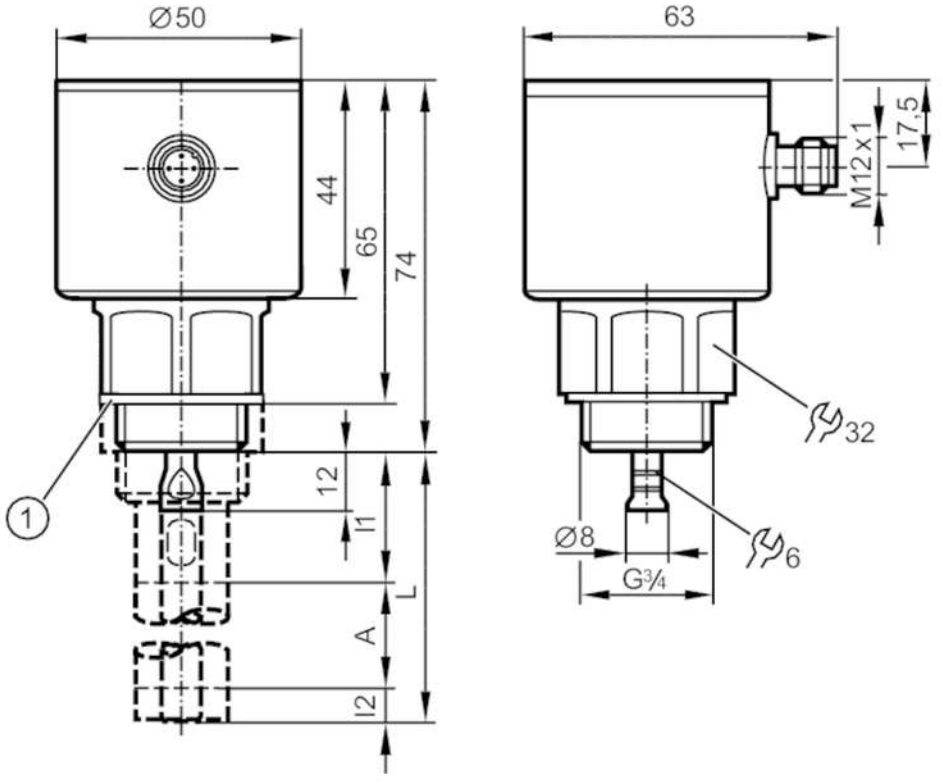

1 Sealing
A active range
I1 / I2 inactive ranges

Product characteristics			
Number of inputs and outputs		Number of digital outputs: 1; Number of analogue outputs: 1	
Probe length L	[mm]	100...2000	
Process connection		threaded connection G 3/4 external thread	
Application			
Special feature		Gold-plated contacts	
Application		for industrial applications	
Media		Liquids	
Dielectric constant of the medium		≥ 1,8; (for media with a dielectric constant of 1.8...5 (e.g. oils), a coaxial pipe is needed for operation)	
Recommended media		water; hydrous media; oils; oil-based media	
Process temperature	[°C]	-25...80; (90 < 1 h ; see note under remarks)	
Pressure rating		16 bar	1.6 MPa
Vacuum resistance		-1000 mbar	-0.1 MPa
Electrical data			
Operating voltage	[V]	18...30 DC	
Current consumption	[mA]	< 25	

LR3020

Continuous level sensor (guided wave radar)

LR0000--BR34AMDKG/US

Protection class		III
Reverse polarity protection		yes
Power-on delay time	[s]	< 3
Measuring principle		guided wave radar
Inputs / outputs		
Number of inputs and outputs		Number of digital outputs: 1; Number of analogue outputs: 1
Outputs		
Total number of outputs		2
Output signal		switching signal; analogue signal; IO-Link
Electrical design		PNP/NPN
Number of digital outputs		1
Output function		normally open / normally closed; (parameterisable)
Max. voltage drop switching output DC	[V]	2.5
Permanent current rating of switching output DC	[mA]	200
Number of analogue outputs		1
Analogue current output	[mA]	4...20, invertible
Max. load	[Ω]	500
Analogue voltage output	[V]	0...10, invertible
Min. load resistance	[Ω]	2000
Short-circuit protection		yes
Type of short-circuit protection		pulsed
Overload protection		yes
Measuring/setting range		
Probe length L	[mm]	100...2000
Active range A	[mm]	L-40; (when set to oil and oil based media: L-60)
Inactive range I1 / I2	[mm]	30 / 10; (when set to oil and oil based media: 30 / 30)
Sampling rate	[Hz]	4
Setting range		
Set point SP	[mm]	15...L-30
Note on setpoint SP		when set to oil and oil based media: 30...L-30
Reset point rP	[mm]	10... L-35
Note on reset point rP		when set to oil and oil based media: 35...L-35
In steps of	[mm]	5
Hysteresis	[mm]	> 5
Accuracy / deviations		
Repeatability	[mm]	± 5
Measuring error	[mm]	± 7
Offset error	[mm]	5
Resolution	[mm]	1
Zero signal (voltage)	[V]	0
Zero signal (current)	[mA]	4.0

LR3020

Continuous level sensor (guided wave radar)

LR0000--BR34AMDKG/US

Full signal (voltage)	[V]	10	
Full signal (current)	[mA]	20	
Temperature drift per 10 K		± 0.2 %	
Interfaces			
Communication interface		IO-Link	
Transmission type		COM2 (38,4 kBaud)	
IO-Link revision		1.1	
SDCI standard		IEC 61131-9	
Profiles		Smart Sensor: Process Data Variable; Device Identification, Device Diagnosis	
SIO mode		yes	
Required master port type		A	
Process data analogue		3	
Process data binary		1	
Min. process cycle time	[ms]	3.2	
Supported DeviceIDs		**Type of operation**	**DeviceID**
		default	687
Operating conditions			
Ambient temperature	[°C]	-25...60	
Storage temperature	[°C]	-40...85	
Protection		IP 68; IP 69K; (7 days / 1 m water depth / 0.1 bar: IP 68)	
Tests / approvals			
EMC		DIN EN 61000-6-2	
		DIN EN 61000-6-3	in a closed metal tank
		DIN EN 61000-6-4	in plastic or open metal tanks
Shock resistance		DIN EN 60068-2-27	50 g (11 ms) / 25 g (6 ms) with reference rod 0.5 m
Vibration resistance		DIN EN 60068-2-6	5 g (10...2000 Hz) / 1 g (5...200 Hz) with reference rod 0.5 m
MTTF	[years]	241	
UL approval		UL Approval no.	H012
		File number UL	E174191
Mechanical data			
Weight	[g]	437.3	
Dimensions	[mm]	Ø 50 / L = 86	
Materials		stainless steel (304/1.4301); stainless steel (316L/1.4404); FKM; PEI	
Materials (wetted parts)		stainless steel (303/1.4305); probe connection: stainless steel (316L/1.4435); PTFE; FKM; Sealing: NBR reinforced fibre	
Process connection		threaded connection G 3/4 external thread	
Remarks			
Notes		For high process temperatures: The temperature at the process connection is decisive. The actual medium temperature may be higher.	
Pack quantity		1 pcs.	

LR3020

Continuous level sensor (guided wave radar)

LR0000--BR34AMDKG/US

Electrical connection - plug

Connector: 1 x M12; coding: A; Contacts: gold-plated

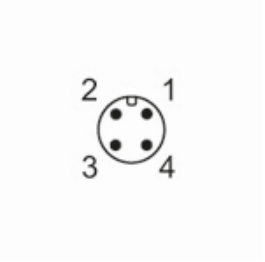

Connection

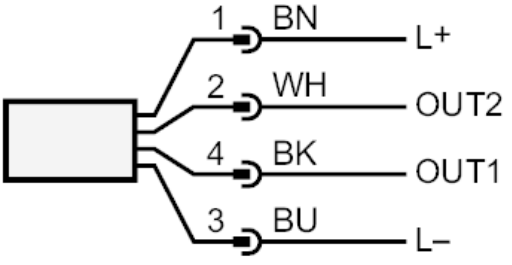

OUT1:	switching output or IO-Link
OUT2:	analogue output
	colours to DIN EN 60947-5-2
	Core colours :
BK =	black
BN =	brown
BU =	blue
WH =	white

LR3020

Continuous level sensor (guided wave radar)

LR0000--BR34AMDKG/US

Diagrams and graphs

Measurement deviation D at the limits of the active rod range

