X20(c)DI4760

Data sheet
3.30 (08.2024)



Translation of the original documentation

Publishing information

B&R Industrial Automation GmbH

B&R Strasse 1

5142 Eggelsberg

Austria

Telephone: +43 7748 6586-0

Fax: +43 7748 6586-26

office@br-automation.com

Disclaimer

All information in this document is current as of its creation. The contents of this document are subject to change without notice. B&R Industrial Automation GmbH assumes unlimited liability in particular for technical or editorial errors in this document only (i) in the event of gross negligence or (ii) for culpably inflicted personal injury. Beyond that, liability is excluded to the extent permitted by law. Liability in cases in which the law stipulates mandatory unlimited liability (such as product liability) remains unaffected. Liability for indirect damage, consequential damage, business interruption, loss of profit or loss of information and data is excluded, in particular for damage that is directly or indirectly attributable to the delivery, performance and use of this material.

B&R Industrial Automation GmbH notes that the software and hardware designations and brand names of the respective companies used in this document are subject to general trademark, brand or patent protection.

Hardware and software from third-party suppliers referenced in this document is subject exclusively to the respective terms of use of these third-party providers. B&R Industrial Automation GmbH assumes no liability in this regard. Any recommendations made by B&R Industrial Automation GmbH are not contractual content, but merely non-binding information for which no liability is assumed. When using hardware and software from third-party suppliers, the relevant user documentation of these third-party suppliers must additionally be consulted and, in particular, the safety guidelines and technical specifications contained therein must be observed. The compatibility of the products from B&R Industrial Automation GmbH described in this document with hardware and software from third-party suppliers is not contractual content unless this has been separately agreed in individual cases; in this respect, warranty for such compatibility is excluded in any case, and it is the sole responsibility of the customer to verify this compatibility in advance.

Version history

B&R makes every effort to keep documents as current as possible. The most current versions are available for download on the B&R website (www.br-automation.com).

1 General information

1.1 Other applicable documents

For additional and supplementary information, see the following documents.

Other applicable documents

Document name	Title
MAX20	X20 System user's manual
MAEMV	Installations / EMV guide

1.2 Coated modules

Coated modules are X20 modules with a protective coating for the electronics component. This coating protects X20c modules from condensation and corrosive gases.
The modules' electronics are fully compatible with the corresponding X20 modules.

For simplification purposes, only images and module IDs of uncoated modules are used in this data sheet.

The coating has been certified according to the following standards:

- Condensation: BMW GS 95011-4, 2x 1 cycle
- Corrosive gas: EN 60068-2-60, method 4, exposure 21 days



1.2.1 Starting temperature

The starting temperature describes the minimum permissible ambient temperature in a voltage-free state at the time the coated module is switched on. This is permitted to be as low as -40°C. During operation, the conditions as specified in the technical data continue to apply.

Information:

It is important to absolutely ensure that there is no forced cooling by air currents in the closed control cabinet, e.g. due to the use of a fan or ventilation slots.

1.3 Order data

Order number	Short description	Figure
	Digital inputs	
X20DI4760	X20 digital input module, 4 NAMUR inputs, 8.05 V	
X20cDI4760	X20 digital input module, coated, 4 NAMUR inputs, 8.05 V	
	Required accessories	
	Bus modules	
X20BM11	X20 bus module, 24 VDC keyed, internal I/O power supply connected through	
X20BM15	X20 bus module, with node number switch, 24 VDC keyed, internal I/O power supply connected through	
X20cBM11	X20 bus module, coated, 24 VDC keyed, internal I/O power supply connected through	
	Terminal blocks	
X20TB12	X20 terminal block, 12-pin, 24 VDC keyed	

Table 1: X20DI4760, X20cDI4760 - Order data

1.4 Module description

The module is used to transfer digital signals from NAMUR encoders according to EN 60947-5-6. In addition to NAMUR encoders, normal switches can also be used.

Functions:

- Digital inputs
- Open-circuit and short-circuit detection
- Edge counter

Digital inputs

The digital inputs are equipped with an input filter with a configurable input delay.

Monitoring the input channels

Each input channel is monitored for short circuit and open circuit. In the event of error, a replacement value can be used.

Edge counter

The module is equipped with edge counters to evaluate positive edges.

2 Technical description

2.1 Technical data

Order number	X20DI4760	X20cDI4760
Short description		
I/O module	4 NAMUR inputs, special function	
General information		
B&R ID code	0x2105	0xE221
Status indicators	I/O function per channel, open-circuit and short-circuit detection per channel, operating state, module status	
Diagnostics		
Module run/error	Yes, using LED status indicator and software	
Short circuit	Yes, using LED status indicator and software	
Open circuit	Yes, using LED status indicator and software	
Power consumption		
Bus	0.01 W	
Internal I/O	1.5 W	
Additional power dissipation caused by actuators (resistive) [W]	-	
Certifications		
CE	Yes	
UKCA	Yes	
ATEX	Zone 2, II 3G Ex nA nC IIA T5 Gc IP20, Ta (see X20 user's manual) FTZÚ 09 ATEX 0083X	
UL	cULus E115267 Industrial control equipment	
HazLoc	cCSAus 244665 Process control equipment for hazardous locations Class I, Division 2, Groups ABCD, T5	
DNV	Temperature: **B** (0 to 55°C) Humidity: **B** (up to 100%) Vibration: **B** (4 g) EMC: **B** (bridge and open deck)	
CCS	Yes	-
LR	ENV1	
KR	Yes	
ABS	Yes	
BV	**EC33B** Temperature: 5 - 55°C Vibration: 4 g EMC: Bridge and open deck	
KC	Yes	-
Event counters		
Quantity	4	
Signal form	Symmetrical square waves or corresponding minimum pulse duration [1)]	
Evaluation	Each positive edge, cyclic counter	
Counter size	8-bit	
Input frequency		
1 input active	Max. 1600 Hz	
2 inputs active	Max. 1100 Hz	
3 inputs active	Max. 870 Hz	
4 inputs active	Max. 680 Hz	
NAMUR inputs		
Open-circuit detection	<350 µA	
Input circuit	For NAMUR encoder per EN 60947-5-6	
Insulation voltage between channel and bus	500 V_{eff}	
Short-circuit detection	>7 mA	
Open-circuit voltage	8.05 V ±0.33%	
Switching amplifier internal resistance	1 kΩ ±1%	
Max. short-circuit current	8.2 mA	
Input delay		
1 input active	≤310 µs	
2 inputs active	≤450 µs	
3 inputs active	≤570 µs	
4 inputs active	≤735 µs	

Table 2: X20DI4760, X20cDI4760 - Technical data

Order number	X20DI4760	X20cDI4760
Switching threshold		
Area	1.2 mA to 2.1 mA	
Switching hysteresis	Typ. 300 µA	
Electrical properties		
Electrical isolation	Channel isolated from bus Channel not isolated from channel	
Operating conditions		
Mounting orientation		
Horizontal	Yes	
Vertical	Yes	
Installation elevation above sea level		
0 to 2000 m	No limitation	
>2000 m	Reduction of ambient temperature by 0.5°C per 100 m	
Degree of protection per EN 60529	IP20	
Ambient conditions		
Temperature		
Operation		
Horizontal mounting orientation	-25 to 60°C	
Vertical mounting orientation	-25 to 50°C	
Derating	See section "Derating".	
Starting temperature	-	Yes, -40°C
Storage	-40 to 85°C	
Transport	-40 to 85°C	
Relative humidity		
Operation	5 to 95%, non-condensing	Up to 100%, condensing
Storage	5 to 95%, non-condensing	
Transport	5 to 95%, non-condensing	
Mechanical properties		
Note	Order 1x terminal block X20TB12 separately. Order 1x bus module X20BM11 separately.	Order 1x terminal block X20TB12 separately. Order 1x bus module X20cBM11 separately.
Pitch	$12.5^{+0.2}$ mm	

Table 2: X20DI4760, X20cDI4760 - Technical data

1) Minimum pulse duration: $t[s] \geq 1/(2 \times f_{max}[Hz])$

2.2 Status LEDs

For a description of the various operating modes, see section "Additional information - Diagnostic LEDs" in the X20 System user's manual.

Image	LED	Color	Status	Description
	r	Green	Off	No power to module
			Single flash	RESET mode
			Blinking	PREOPERATIONAL mode
			On	RUN mode
	e	Red	Off	Module supply not connected or everything OK
			On	Error or reset status
			Single flash	Error on at least one channel
	e + r	Red on / Green single flash		Invalid firmware
	1 - 4	Green	Off	Open line or input status log. 0
			On	Short circuit or input status log. 1
	1 - 4	Red	Off	The sensor is ready for operation
			Blinking 1Hz	Open line on corresponding channel
			On	Short circuit on corresponding channel

2.3 Pinout

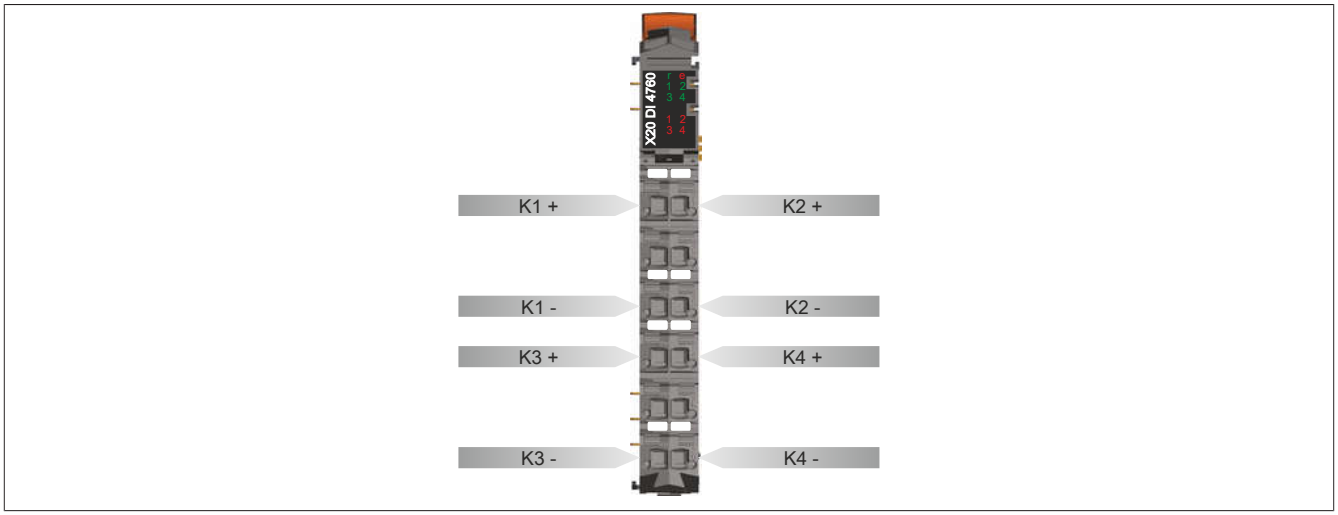

2.4 Connection example

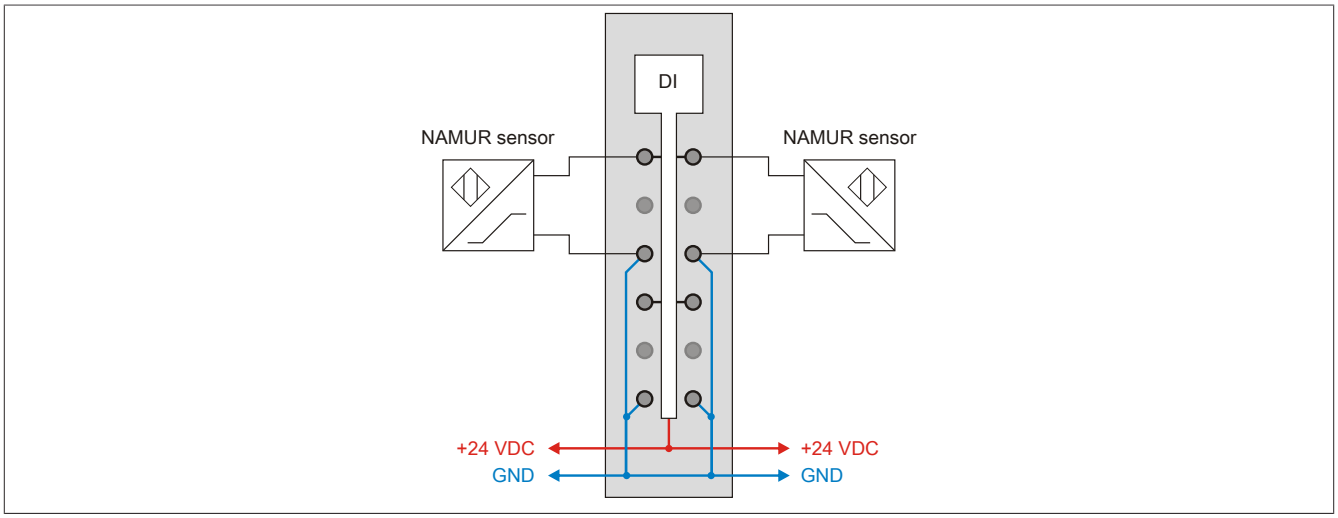

2.5 Input circuit diagram

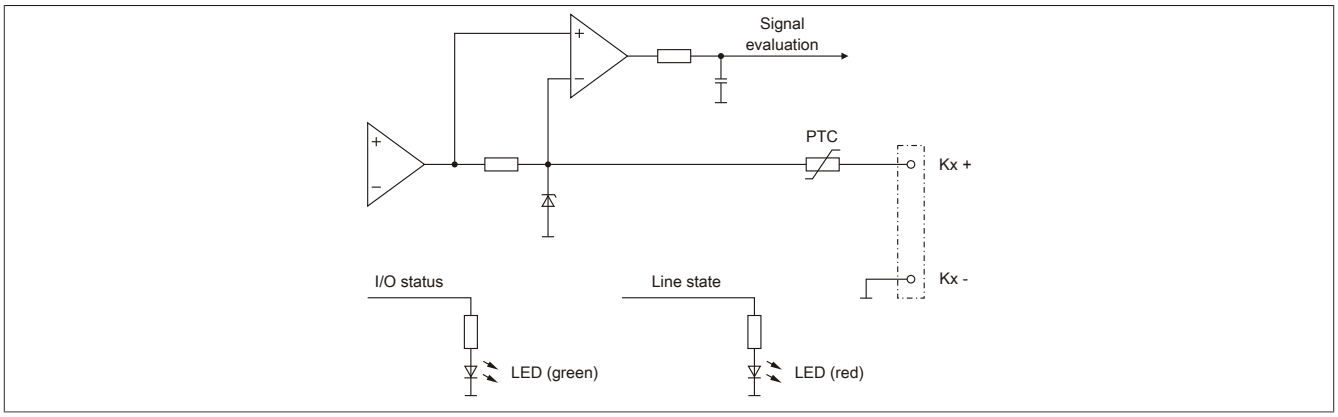

2.6 Derating

There is no derating when operated below 55°C.

When operated above 55°C, the modules to the left and right of this module are permitted to have a maximum power dissipation of 1.15 W!

For an example of calculating the power dissipation of I/O modules, see section "Mechanical and electrical configuration - Power dissipation of I/O modules" in the X20 user's manual.

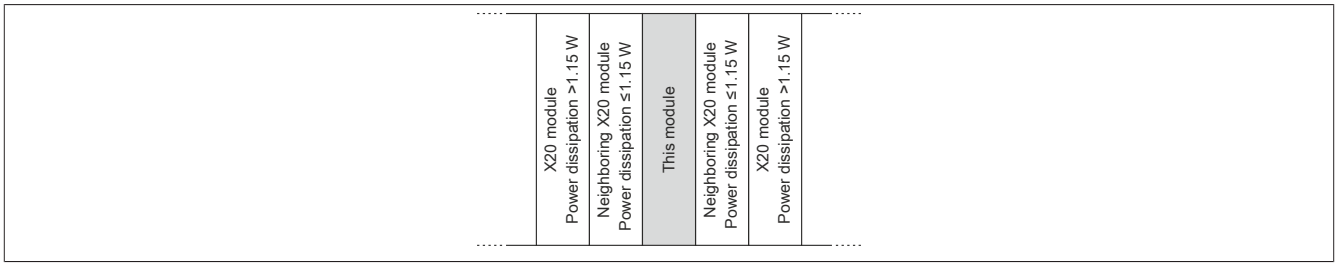

3 Function description

3.1 Digital inputs

The module is equipped with 4 digital input channels.

3.1.1 Recording the input state

Unfiltered

The input state is collected with a fixed offset to the network cycle and transferred in the same cycle.

Filtered

The filtered state is collected with a fixed offset to the network cycle and transferred in the same cycle. Filtering takes place asynchronously to the network in multiples of 200 µs with a network-related jitter of up to 50 µs.

Packed outputs (only function model 0 - Standard)

Setting "Packed inputs" in the Automation Studio I/O configuration can be used to determine whether all bits of the register should be applied as individual data points in the Automation Studio I/O mapping (e.g. "DigitalInput01 to DigitalInputxx") or whether the register should be displayed as a single USINT data point (e.g. "DigitalInput").

Information:

The register is described in "Input state of digital inputs 1 to 4" on page 13.

3.1.2 Input filter

An input filter is available for each input. Disturbance pulses that are shorter than the input delay are suppressed by the input filter.

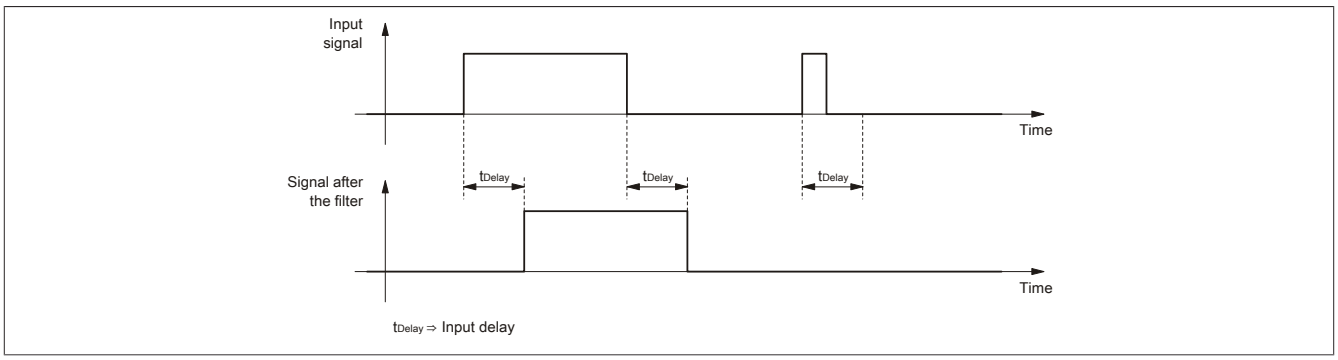

The input delay can be set in steps of 100 µs. It makes sense, however, to enter values in steps of 2 since the input signals are sampled in an interval of 200 µs.

Values	Filter
0	No software filter
2	0.2 ms
...	...
250	25 ms - Higher values are limited to this value.

Information:

The register is described in "Digital input filter" on page 13.

3.2 Monitoring the input channels

The digital input channels of the module are monitored for the following states. Each channel can be evaluated separately:

- Short circuit of the sensor line
- Open circuit of the sensor line
- Sensor power supply

Information:

The registers are described in "Status of channels 1 to 4" on page 14, "Replacement values during overload" on page 14 and Input state of digital inputs 1 to 4.

3.2.1 Open-circuit and short-circuit detection

Open-circuit and short-circuit detection can be evaluated separately for each channel. In addition, defined replacement values can be specified for the individual channels depending on the error situation.

Value	Description
0	No error
1	Open circuit or short circuit

Circuit examples

For open-circuit and short-circuit detection, the sensor must be connected accordingly with resistors. The resistors are connected in series or parallel to the sensor.

Proximity switch	
Switches per EN 60947-5-6 (NAMUR)	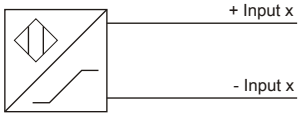
Mechanical contacts (instead of NAMUR encoders)	
Without open-circuit and short-circuit detection	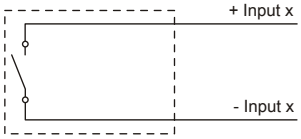
Without open-circuit and with short-circuit detection	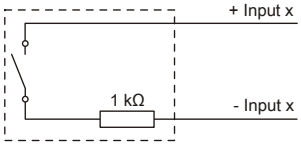
With open-circuit and without short-circuit detection	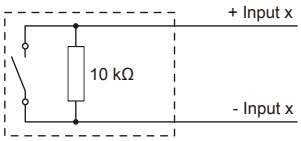
With open-circuit and short circuit detection	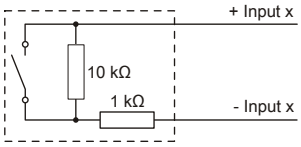

3.3 Edge counter

Each channel is equipped with an edge counter. The positive edges of the individual channels are incremented continuously.

Information:

The register is described in "Positive edge counter on digital inputs" on page 14.

4 Commissioning

4.1 Using the module on the bus controller

Function model 254 "Bus controller" is used by default only by non-configurable bus controllers. All other bus controllers can use other registers and functions depending on the fieldbus used.

For detailed information, see section "Additional information - Using I/O modules on the bus controller" in the X20 user's manual (version 3.50 or later).

4.1.1 CAN I/O bus controller

The module occupies 1 digital logical slot on CAN I/O.

5 Register description

5.1 General data points

In addition to the registers described in the register description, the module has additional general data points. These are not module-specific but contain general information such as serial number and hardware variant.

General data points are described in section "Additional information - General data points" in the X20 System user's manual.

5.2 Function model 0 - Standard

Register	Name	Data type	Read		Write	
			Cyclic	Acyclic	Cyclic	Acyclic
Configuration						
16	ConfigOutput01 (channel/status configuration)	USINT				•
18	ConfigOutput02 (replacement values)	USINT				•
20	ConfigOutput03 (input filter)	USINT				•
Communication						
0	DigitalInput	USINT	•			
	DigitalInput01	Bit 0				
	...	...				
	DigitalInput04	Bit 3				
4	Counter01	USINT	•			
6	Counter02	USINT	•			
8	Counter03	USINT	•			
10	Counter04	USINT	•			
30	StatusInput	USINT	•			
	ShortCircuit01	Bit 0				
	...	...				
	ShortCircuit04	Bit 3				
	OpenLine01	Bit 4				
	...	...				
	OpenLine04	Bit 7				

5.3 Function model 254 - Bus Controller

Register	Offset[1)]	Name	Data type	Read		Write	
				Cyclic	Acyclic	Cyclic	Acyclic
Configuration							
16	-	ConfigOutput01 (channel/status configuration)	USINT				•
18	-	ConfigOutput02 (replacement values)	USINT				•
20	-	ConfigOutput03 (input filter)	USINT				•
Communication							
0	0	Input state of digital inputs 1 to 4	USINT	•			
		DigitalInput01	Bit 0				
		...	...				
		DigitalInput04	Bit 3				
4	-	Counter01	USINT		•		
6	-	Counter02	USINT		•		
8	-	Counter03	USINT		•		
10	-	Counter04	USINT		•		
30	-	Status of channels 1 to 4	USINT		•		
		ShortCircuit01	Bit 0				
		...	...				
		ShortCircuit04	Bit 3				
		OpenLine01	Bit 4				
		...	...				
		OpenLine04	Bit 7				

1) The offset specifies where the register is within the CAN object.

5.4 Digital inputs

5.4.1 Disabling channels and status messages

Name:
ConfigOutput01

This register can be used to (de)activate individual channels or just their status responses.

Only starting with hardware version 7 and firmware version 802.

Data type	Values	Bus controller default setting
USINT	See the bit structure.	0

Bit structure:

Bit	Name	Value	Information
0	Channel 1	0	Channel enabled (bus controller default setting)
		1	Channel disabled
...		...	
3	Channel 4	0	Channel enabled (bus controller default setting)
		1	Channel disabled
4	Status message - Channel 1	0	Status message enabled (bus controller default setting)
		1	Status message deactivated
...		...	
7	Status message - Channel 4	0	Status message enabled (bus controller default setting)
		1	Status message deactivated

5.4.2 Digital input filter

Name:
ConfigOutput03

The filter value for all digital inputs can be configured in this register.

The filter value can be configured in steps of 100 µs. It makes sense, however, to enter values in steps of 2 since the input signals are sampled in an interval of 200 µs.

Data type	Values	Filter
USINT	0	No software filter (bus controller default setting)
	2	0.2 ms
	...	...
	250	25 ms - Higher values are limited to this value.

5.4.3 Input state of digital inputs 1 to 4

Name:
DigitalInput or
DigitalInput01 to DigitalInput04
PowerSupply

This register contains the input state of digital inputs 1 to 4.

Data type	Values	Information[1)]	
USINT	0x0 to 0x8f	Packed inputs = On Data point: "DigitalInput"	
		0xy0 to 0yF	Status of inputs 1 to 4
		0x0y or 0x8y	Status of the supply voltage
	See the bit structure.	Packed inputs = Off or function model ≠ 0 - Standard Data points: "DigitalInput01" to "DigitalInput04" and "PowerSupply"	

1) See "Digital inputs - Record input status" on page 9.

Bit structure:

Bit	Name	Value	Information
0	DigitalInput01	0 or 1	Input state - Digital input 1
...		...	
3	DigitalInput04	0 or 1	Input state - Digital input 4
4 - 6	Reserved	0	
7	PowerSupply	0	Supply voltage too low
		1	Supply voltage >80 VAC

5.5 Positive edge counter on digital inputs

Name:
Counter01 to Counter04

These registers cyclically count the positive edges on the individual channels.

Data type	Value
USINT	Positive edge counter on channel, cyclic

5.6 Status of channels 1 to 4

Name:
StatusInput01 and
ShortCircuit01 to ShortCircuit04
OpenLine01 to OpenLine04

This register indicates whether an open line or overflow has occurred on the individual channels.

Data type	Values	Information[1)]
USINT	0 to 255	Packed inputs = On Data point: "StatusInput01"
	See bit structure.	Packed inputs = Off or function model ≠ 0 - Standard Data points: "ShortCircuit01" to "ShortCircuit04" and "OpenLine01" to "OpenLine04"

1) See "Digital inputs - Record input status" on page 9.

Bit structure:

Bit	Name	Value	Information
0	ShortCircuit01	0	No error
		1	Overload on channel 1
...		...	
3	ShortCircuit04	0	No error
		1	Overload on channel 4
4	OpenLine01	0	No error
		1	Open line on channel 1
...		...	
7	OpenLine04	0	No error
		1	Open line on channel 4

5.7 Replacement values during overload

Name:
ConfigOutput02

This register can be used to specify defined replacement values for the individual channels according to the error situation.

Only starting with hardware variant 7 and firmware version 802.

Data type	Values	Bus controller default setting
USINT	See the bit structure.	15

Bit structure:

Bit	Name	Value	Information
0	Overload - Channel 1	0	Replacement value when overload is FALSE
		1	Replacement value if overload TRUE (bus controller default setting)
...		...	
3	Overload - Channel 4	0	Replacement value when overload is FALSE
		1	Replacement value if overload TRUE (bus controller default setting)
4	Open line - Channel 1	0	Replacement value when open line is FALSE
		1	Replacement value if open circuit TRUE (bus controller default setting)
...		...	
7	Open line - Channel 4	0	Replacement value when open line is FALSE
		1	Replacement value if open circuit TRUE (bus controller default setting)

5.8 Minimum cycle time

The minimum cycle time specifies how far the bus cycle can be reduced without communication errors occurring. It is important to note that very fast cycles reduce the idle time available for handling monitoring, diagnostics and acyclic commands.

Minimum cycle time	
Without filtering	100 µs
With filtering	150 µs

5.9 Minimum I/O update time

The minimum I/O update time specifies how far the bus cycle can be reduced so that an I/O update is performed in each cycle.

Minimum I/O update time	
Without filtering	100 µs
With filtering	200 µs