MOS FET Relays
G3VM Series

Wide Range of Contact Forms, Sizes and Package Types

- Controls load voltages up to 600 V.
- Terminal packages include PCB through-hole, SMT gullwing, SOP, and SSOP.
- Low ON-resistance, low output capacitance, current limiting, and high dielectric (5000 VAC) models available.
- Packaged for efficient automatic insertion: PCB through-hole and SMT are in tubes; tape-and-reel packaging is standard for SOP and SSOP models, and optional for SMT models ("TR" suffix).
- Complete specifications follow, divided by Package Type, Terminals and Contact Form.

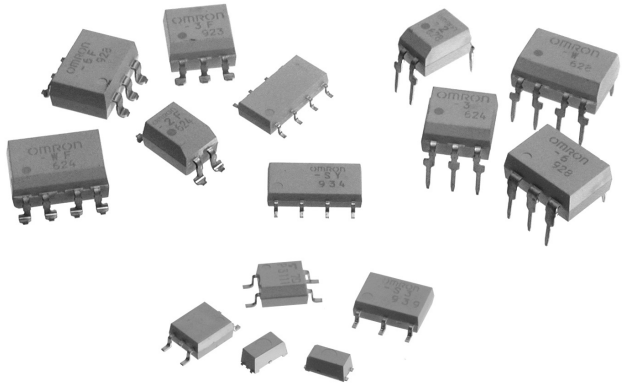

Typical Applications

■ Communications

- Local area network equipment
- Central office circuit boards for subscriber line interfaces, multiplexers and other routing equipment
- Wireless communications for cell phones and pagers
- Set-top TV boxes with internal modems
- Fax machines
- PCMCIA card
- Internal modems for PDA equipment and laptop computers

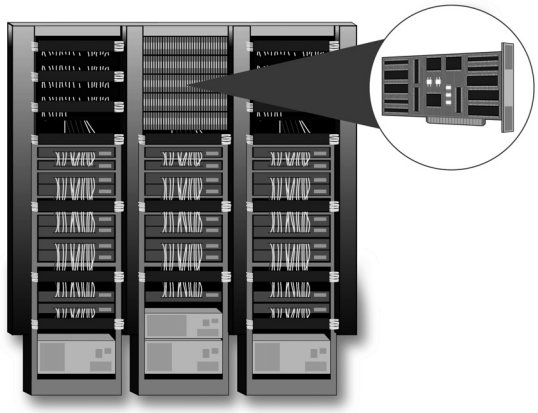

■ Test & Measurement

- Board testers
- IC testers
- Portable voltage testers

■ Security

- Alarm control boards
- Home security systems
- Garage door openers



Selection Guide

Load voltage	Contact form	Package/ Terminal shape	No. of terminals	Model	Load current (mA)	Voltage withstand (VAC)	ON resistance (max.)	Output capacitance	Additional features	Page no.
20V	1 Form A	SMT	8	**G3VM-22FO**	150	2,500	4 Ω	8 pF (typ.)	Low ON resistance	62
		SOP	4	**G3VM-21GR**	160	1,500	8 Ω	2.5 pF (max.)	Low pF•Ω	70
				G3VM-21GR1	300	1,500	1.5 Ω	12 pF (max.)	Low pF•Ω	70
		SSOP	4	**G3VM-21LR**	150	1,500	8 Ω	12 pF (max.)	—	88
				G3VM-21LR1	300	1,500	1.5 Ω	12 pF (max.)	Low pF•Ω	88
40V	1 Form A	SOP	4	**G3VM-41GR3**	80	1,500	37 Ω	1.4 pF (max.)	—	72
				G3VM-41GR4	250	1,500	3 Ω	7 pF (max.)	Low pF•Ω	74
				G3VM-41GR5	300	1,500	1.5 Ω	14 pF (max.)	Low pF•Ω	74
				G3VM-41GR6	120	1,500	15 Ω	2 pF (max.)	Low pF•Ω	74
		SSOP	4	**G3VM-41LR3**	80	1,500	35 Ω	1.4 pF (max.)	—	88
				G3VM-41LR4	250	1,500	3 Ω	7 pF (max.)	Low pF•Ω	90
				G3VM-41LR5	300	1,500	1.5 Ω	14 pF (max.)	Low pF•Ω	90
				G3VM-41LR6	120	1,500	15 Ω	2 pF (max.)	Low pF•Ω	90
60V	1 Form A	Thru-hole	4	**G3VM-61A**	500	2,500	2 Ω	140 pF (max.)	Low ON resistance	32
				G3VM-61A1	500	2,500	2 Ω	130 pF (typ.)	Low ON resistance	34
			6	**G3VM-61B**	500	2,500	2 Ω	140 pF (max.)	Low ON resistance	38
				G3VM-61B1	500	2,500	2 Ω	130 pF (typ.)	Low ON resistance	40
				G3VM-V	300	2,500	2 Ω	170 pF (typ.)	Low ON resistance	40
			8	**G3VM-61CP**	500	2,500	0.6 Ω	500 pF (max.)	Low ON resistance	42
				G3VM-61CR	2000	1,500	0.12 Ω	1400 pF (max.)	Low ON resistance	44
		SMT	4	**G3VM-61D**	500	2,500	2 Ω	140 pF (max.)	Low ON resistance	52
				G3VM-61D1	500	2,500	2 Ω	130 pF (typ.)	Low ON resistance	54
			6	**G3VM-61E**	500	2,500	2 Ω	140 pF (max.)	Low ON resistance	58
				G3VM-61E1	500	2,500	2 Ω	130 pF (typ.)	Low ON resistance	60
60 V	1 Form A	SMT	6	**G3VM-VF**	300	2,500	2 Ω	170 pF (typ.)	Low ON resistance	60
			8	**G3VM-61FP**	500	2,500	0.6 Ω	500 pF (max.)	Low ON resistance	64
				G3VM-61FR	2000	1,500	0.12 Ω	1400 pF (max.)	Low ON resistance	64
		SOP	4	**G3VM-61G1**	400	1,500	2 Ω	130 pF (typ.)	Low ON resistance	76
				G3VM-S1	400	1,500	2 Ω	140 pF (max.)	Low ON resistance	76
			6	**G3VM-61H1**	400	1,500	2 Ω	130 pF (typ.)	Low ON resistance	80
	2 Form A	Thru-hole	8	**G3VM-62C1**	500	2,500	2 Ω	130 pF (typ.)	Low ON resistance	46
		SMT	8	**G3VM-62F1**	500	2,500	2 Ω	130 pF (typ.)	Low ON resistance	66
		SOP	8	**G3VM-62J1**	400	1,500	2 Ω	130 pF (typ.)	Low ON resistance	84
				G3VM-SY	300	1,500	2 Ω	140 pF (max.)	Low ON resistance	86
80 V	1 Form A	SOP	4	**G3VM-81G1**	350	1,500	1.2 Ω	40 pF (max.)	Low ON resistance	76
			6	**G3VM-81HR**	1250	1,500	0.15 Ω	1000 pF (max.)	Low ON resistance	80
200 V	1 Form A	SOP	4	**G3VM-S5**	150	1,500	8 Ω	100 pF (typ.)	—	78

Load voltage	Contact form	Package/ Terminal shape	No. of terminals	Model	Load current (mA)	Voltage withstand (VAC)	ON resistance (max.)	Output capacitance	Additional features	Page no.
350 V	1 Form A	Thru-hole	4	**G3VM-2**	120	2,500	35 Ω	75 pF (typ.)	—	30
				G3VM-2L	120	2,500	35 Ω	75 pF (typ.)	Current limiting	30
				G3VM-351A	120	2,500	35 Ω	30 pF (typ.)	—	30
			6	**G3VM-351B**	120	2,500	35 Ω	30 pF (typ)	—	34
				G3VM-3	120	2,500	35 Ω	75 pF (typ)	—	36
				G3VM-3L	120	2,500	35 Ω	75 pF (typ.)	Current limiting	36
350 V	1 Form A	SMT	4	**G3VM-2F**	120	2,500	35 Ω	75 pF (typ.)	—	50
				G3VM-2FL	120	2,500	35 Ω	75 pF (typ.)	Current limiting	50
				G3VM-351D	120	2,500	35 Ω	30 pF (typ.)	—	50
			6	**G3VM-351E**	120	2,500	35 Ω	30 pF (typ.)	—	54
				G3VM-3F	120	2,500	35 Ω	75 pF (typ.)	—	56
				G3VM-3FL	120	2,500	35 Ω	75 pF (typ.)	Current limiting	56
		SOP	4	**G3VM-351G**	110	1,500	35 Ω	30 pF (typ.)	—	70
				G3VM-S2	120	1,500	35 Ω	75 pF (typ.)	—	78
			6	**G3VM-351H**	110	1,500	35 Ω	30 pF (typ.)	—	78
				G3VM-S3	120	1,500	35 Ω	75 pF (typ.)	—	82
	1 Form A + 1 Form B	Thru-hole	8	**G3VM-355CR**	120	2,500	25 Ω	65 pF (typ.)	—	44
		SMT	8	**G3VM-355FR**	120	2,500	25 Ω	65 pF (typ.)	—	64
		SOP	8	**G3VM-355JR**	120	2,500	25 Ω	65 pF (typ.)	—	82
	2 Form A	Thru-hole	8	**G3VM-352C**	120	2,500	35 Ω	30 pF (typ.)	—	44
				G3VM-W	120	2,500	35 Ω	75 pF (typ.)	—	46
				G3VM-WL	120	2,500	35 Ω	75 pF (typ.)	Current limiting	48
		SMT	8	**G3VM-352F**	120	2,500	35 Ω	30 pF (typ.)	—	66
				G3VM-WF	120	2,500	35 Ω	75 pF (typ.)	—	68
				G3VM-WFL	120	2,500	35 Ω	75 pF (typ.)	Current limiting	68
		SOP	8	**G3VM-352J**	110	1,500	35 Ω	30 pF (typ.)	—	82
				G3VM-SW	120	1,500	35 Ω	75 pF (typ.)	—	84
	1 Form B	Thru-hole	4	**G3VM-353A**	150	2,500	25 Ω	100 pF (typ.)	—	32
			6	**G3VM-353B**	150	2,500	25 Ω	100 pF (typ.)	—	34
		SMT	4	**G3VM-353D**	150	2,500	25 Ω	100 pF (typ.)	—	52
			6	**G3VM-353E**	150	2,500	25 Ω	100 pF (typ.)	—	54
350 V	1 Form B	SOP	4	**G3VM-353G**	120	1,500	25 Ω	130 pF (typ.)	—	72
			6	**G3VM-353H**	120	1,500	25 Ω	65 pF (typ.)	—	80
	2 Form B	Thru-hole	8	**G3VM-354C**	120	2,500	35 Ω	100 pF (typ.)	—	48
		SMT	8	**G3VM-354F**	120	2,500	35 Ω	100 pF (typ.)	—	68
		SOP	8	**G3VM-354J**	120	1,500	25 Ω	65 pF (typ.)	—	86
400 V	1 Form A	Thru-hole	4	**G3VM-401A**	120	2,500	35 Ω	70 pF (typ.)	—	32
			6	**G3VM-401B**	120	2,500	35 Ω	75 pF (typ.)	—	36
				G3VM-401BY	120	5,000	35 Ω	75 pF (typ.)	High I/O isolation	38
		SMT	4	**G3VM-401D**	120	2,500	35 Ω	70 pF (typ.)	—	52
			6	**G3VM-401E**	120	2,500	35 Ω	75 pF (typ.)	—	56
				G3VM-401EY	120	5,000	35 Ω	75 pF (typ.)	High I/O isolation	58
		SOP	4	**G3VM-401G**	120	1,500	35 Ω	70 pF (typ.)	—	72
	2 Form A	Thru-hole	8	**G3VM-402C**	120	2,500	35 Ω	70 pF (typ.)	—	46
		SMT	8	**G3VM-402F**	120	2,500	35 Ω	70 pF (typ.)	—	66
		SOP	8	**G3VM-402J**	120	2,500	35 Ω	70 pF (typ.)	—	84
600 V	1 Form A	Thru-hole	6	**G3VM-601BY**	100	5,000	45 Ω	100 pF (typ.)	High I/O isolation	38
		SMT	6	**G3VM-601EY**	100	5,000	35 Ω	100 pF (typ.)	High I/O isolation	58

Part Number Index and Ordering Information

Note: "G3VM" is not printed on the actual product.

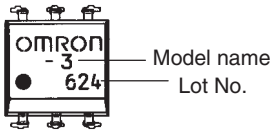

The following tables show standard quantities of G3VM relays as shipped in tubes or tape-and-reel packaging. Dimensions for tape-and-reel parts are shown in individual data sheets that follow.

Description	Packaging	Standard pack quantity	Model	Page no.
MOSFET THRU-HOLE RELAY	Tube	50	**G3VM-2**	30
MOSFET SMT RELAY	Tube	50	**G3VM-2F**	50
MOSFET SMT RELAY	Tape-and-reel	1500	**G3VM-2F(TR)**	50
MOSFET SMT RELAY	Tube	50	**G3VM-2FL**	50
MOSFET SMT RELAY	Tape-and-reel	1500	**G3VM-2FL(TR)**	50
MOSFET THRU-HOLE RELAY	Tube	50	**G3VM-2L**	30
MOSFET SOP RELAY	Tube	50	**G3VM-21GR**	70
MOSFET SOP RELAY	Tape-and-reel	2500	**G3VM-21GR(TR)**	70
MOSFET SOP RELAY	Tube	50	**G3VM-21GR1**	70
MOSFET SOP RELAY	Tape-and-reel	2500	**G3VM-21GR1(TR)**	70
MOSFET SSOP RELAY	Tape-and-reel	1500	**G3VM-21LR**	88
MOSFET SSOP RELAY	Tape-and-reel	1500	**G3VM-21LR1**	88
MOSFET SMT RELAY	Tube	50	**G3VM-22FO**	62
MOSFET SMT RELAY	Tape-and-reel	1500	**G3VM-22FO(TR)**	62
MOSFET THRU-HOLE RELAY	Tube	50	**G3VM-3**	36
MOSFET SMT RELAY	Tube	50	**G3VM-3F**	56
MOSFET SMT RELAY	Tape-and-reel	1500	**G3VM-3F(TR)**	56
MOSFET SMT RELAY	Tube	50	**G3VM-3FL**	56
MOSFET SMT RELAY	Tape-and-reel	1500	**G3VM-3FL(TR)**	56
MSOFET THRU-HOLE RELAY	Tube	50	**G3VM-3L**	36
MOSFET THRU-HOLE RELAY	Tube	50	**G3VM-351A**	30
MOSFET THRU-HOLE RELAY	Tube	50	**G3VM-351B**	34
MOSFET SMT RELAY	Tube	50	**G3VM-351D**	50
MOSFET SMT RELAY	Tape-and-reel	1500	**G3VM-351D(TR)**	50
MOSFET SMT RELAY	Tube	50	**G3VM-351E**	54
MOSFET SMT RELAY	Tape-and-reel	1500	**G3VM-351E(TR)**	54
MOSFET SOP RELAY	Tube	50	**G3VM-351G**	70
MOSFET SOP RELAY	Tape-and-reel	2500	**G3VM-351G(TR)**	70
MOSFET SOP RELAY	Tube	50	**G3VM-351H**	78
MOSFETSOP RELAY	Tape-and-reel	2500	**G3VM-351H(TR)**	78
MOSFET THRU-HOLE RELAY	Tube	50	**G3VM-352C**	44
MOSFET SMT RELAY	Tube	50	**G3VM-352F**	66
MOSFET SMT RELAY	Tape-and-reel	1500	**G3VM-352F(TR)**	66
MOSFET SOP RELAY	Tube	50	**G3VM-352J**	82
MOSFET SOP RELAY	Tape-and-reel	2500	**G3VM-352J(TR)**	82

Description	Packaging	Standard pack quantity	Model	Page no.
MOSFET THRU-HOLE RELAY	Tube	50	**G3VM-353A**	32
MOSFET THRU-HOLE RELAY	Tube	50	**G3VM-353B**	34
MOSFET SMT RELAY	Tube	50	**G3VM-353D**	52
MOSFET SMT RELAY	Tape-and-reel	1500	**G3VM-353D(TR)**	52
MOSFET SMT RELAY	Tube	50	**G3VM-353E**	54
MOSFET SMT RELAY	Tape-and-reel	1500	**G3VM-353E(TR)**	54
MOSFET SOP RELAY	Tube	50	**G3VM-353G**	72
MOSFET SOP RELAY	Tape-and-reel	2500	**G3VM-353G(TR)**	72
MOSFET SOP RELAY	Tube	50	**G3VM-353H**	80
MOSFET SOP RELAY	Tape-and-reel	2500	**G3VM-353H(TR)**	80
MOSFET THRU-HOLE RELAY	Tube	50	**G3VM-354C**	48
MOSFET SMT RELAY	Tube	50	**G3VM-354F**	68
MOSFET SMT RELAY	Tape-and reel	1500	**G3VM-354F(TR)**	68
MOSFET SOP RELAY	Tube	50	**G3VM-354J**	86
MOSFET SOP RELAY	Tape-and-reel	2500	**G3VM-354J(TR)**	86
MOSFET THRU-HOLE RELAY	Tube	50	**G3VM-355CR**	44
MOSFET SMT RELAY	Tube	50	**G3VM-355FR**	64
MOSFET SMT RELAY	Tape-and-reel	1500	**G3VM-355FR(TR)**	64
MOSFET SOP RELAY	Tube	50	**G3VM-355JR**	82
MOSFET SOP RELAY	Tape-and-reel	2500	**G3VM-355JR(TR)**	82
MOSFET SOP RELAY	Tube	50	**G3VM-41GR3**	72
MOSFET SOP RELAY	Tape-and-reel	2500	**G3VM-41GR3(TR)**	72
MOSFET SOP RELAY	Tube	50	**G3VM-41GR4**	74
MOSFET SOP RELAY	Tape-and-reel	2500	**G3VM-41GR4(TR)**	74
MOSFET SOP RELAY	Tube	50	**G3VM-41GR5**	74
MOSFET SOP RELAY	Tape-and-reel	2500	**G3VM-41GR5(TR)**	74
MOSFET SOP RELAY	Tube	50	**G3VM-41GR6**	74
MOSFET SOP RELAY	Tape-and reel	2500	**G3VM-41GR6(TR)**	74
MOSFET SSOP RELAY	Tape-and-reel	1500	**G3VM-41LR3**	88
MOSFET SSOP RELAY	Tape-and-reel	1500	**G3VM-41LR4**	90
MOSFET SSOP RELAY	Tape-and-reel	1500	**G3VM-41LR5**	90
MOSFET SSOP RELAY	Tape-and-reel	1500	**G3VM-41LR6**	90
MOSFET THRU-HOLE RELAY	Tube	50	**G3VM-401A**	32
MOSFET THRU-HOLE RELAY	Tube	50	**G3VM-401B**	36
MOSFET THRU-HOLE RELAY	Tube	50	**G3VM-401BY**	38
MOSFET SMT RELAY	Tube	50	**G3VM-401D**	52
MOSFET SMT RELAY	Tape-and-reel	1500	**G3VM-401D(TR)**	52
MOSFET SMT RELAY	Tube	50	**G3VM-401E**	56
MOSFET SMT RELAY	Tape-and-reel	1500	**G3VM-401E(TR)**	56
MOSFET SMT RELAY	Tube	50	**G3VM-401EY**	58
MOSFET SMT RELAY	Tape-and-reel	1500	**G3VM-401EY(TR)**	58

This table continues on the next page.

Description	Packaging	Standard pack quantity	Model	Page no.
MOSFET SOP RELAY	Tube	50	**G3VM-401G**	72
MOSFET SOP RELAY	Tape-and-reel	2500	**G3VM-401G(TR)**	72
MOSFET THRU-HOLE RELAY	Tube	50	**G3VM-402C**	46
MOSFET SMT RELAY	Tube	50	**G3VM-402F**	66
MOSFET SMT RELAY	Tape-and-reel	1500	**G3VM-402F(TR)**	66
MOSFET SOP RELAY	Tube	50	**G3VM-402J**	84
MOSFET SOP RELAY	Tape-and reel	2500	**G3VM-402J(TR)**	84
MOSFET THRU-HOLE RELAY	Tube	50	**G3VM-61A**	32
MOSFET THRU-HOLE RELAY	Tube	50	**G3VM-61A1**	34
MOSFET THRU-HOLE RELAY	Tube	50	**G3VM-61B**	38
MOSFET THRU-HOLE RELAY	Tube	50	**G3VM-61B1**	40
MOSFET THRU-HOLE RELAY	Tube	50	**G3VM-61CP**	42
MOSFET THRU-HOLE RELAY	Tube	50	**G3VM-61CR**	44
MOSFET SMT RELAY	Tube	50	**G3VM-61D**	52
MOSFET SMT RELAY	Tape-and-reel	1500	**G3VM-61D(TR)**	52
MOSFET SMT RELAY	Tube	50	**G3VM-61D1**	54
MOSFET SMT RELAY	Tape-and-reel	1500	**G3VM-61D1(TR)**	54
MOSFET SMT RELAY	Tube	50	**G3VM-61E**	58
MOSFET SMT RELAY	Tape-and-reel	1500	**G3VM-61E(TR)**	58
MOSFET SMT RELAY	Tube	50	**G3VM-61E1**	60
MOSFET SMT RELAY	Tape-and-reel	1500	**G3VM-61E1(TR)**	60
MOSFET SMT RELAY	Tube	50	**G3VM-61FP**	64
MOSFET SMT RELAY	Tape-and-reel	1500	**G3VM-61FP(TR)**	64
MOSFET SMT RELAY	Tube	50	**G3VM-61FR**	64
MOSFET SMT RELAY	Tape-and-reel	1500	**G3VM-61FR(TR)**	64
MOSFET SOP RELAY	Tube	50	**G3VM-61G1**	76
MOSFET SOP RELAY	Tape-and-reel	2500	**G3VM-61G1(TR)**	76
MOSFET SOP RELAY	Tube	50	**G3VM-61H1**	80
MOSFET SOP RELAY	Tape-and-reel	2500	**G3VM-61H1(TR)**	80
MOSFET THRU-HOLE RELAY	Tube	50	**G3VM-62C1**	46
MOSFET SMT RELAY	Tube	50	**G3VM-62F1**	66
MOSFET SMT RELAY	Tape-and-reel	1500	**G3VM-62F1(TR)**	66
MOSFET SOP RELAY	Tube	50	**G3VM-62J1**	84
MOSFET SOP RELAY	Tape-and-reel	2500	**G3VM-62J1(TR)**	84
MOSFET THRU-HOLE RELAY	Tube	50	**G3VM-601BY**	38
MOSFET SMT RELAY	Tube	50	**G3VM-601EY**	58
MOSFET SMT RELAY	Tape-and-reel	1500	**G3VM-601EY(TR)**	58
MOSFET SOP RELAY	Tube	50	**G3VM-81G1**	76
MOSFET SOP RELAY	Tape-and-reel	2500	**G3VM-81G1(TR)**	76
MOSFET SOP RELAY	Tube	50	**G3VM-81HR**	80
MOSFET SOP RELAY	Tape-and-reel	2500	**G3VM-81HR(TR)**	80

Description	Packaging	Standard pack quantity	Model	Page no.
MOSFET SOP RELAY	Tube	50	**G3VM-S1**	76
MOSFET SOP RELAY	Tape-and-reel	2500	**G3VM-S1(TR)**	76
MOSFET SOP RELAY	Tube	50	**G3VM-S2**	78
MOSFET SOP RELAY	Tape-and-reel	2500	**G3VM-S2(TR)**	78
MOSFET SOP RELAY	Tube	50	**G3VM-S3**	82
MOSFET SOP RELAY	Tape-and-reel	2500	**G3VM-S3(TR)**	82
MOSFET SOP RELAY	Tube	50	**G3VM-S5**	78
MOSFET SOP RELAY	Tape-and-reel	2500	**G3VM-S5(TR)**	78
MOSFET SOP RELAY	Tube	50	**G3VM-SW**	84
MOSFET SOP RELAY	Tape-and-reel	2500	**G3VM-SW(TR)**	84
MOSFET SOP RELAY	Tube	50	**G3VM-SY**	86
MOSFET SOP RELAY	Tape-and-reel	2500	**G3VM-SY(TR)**	86
MOSFET THRU-HOLE RELAY	Tube	50	**G3VM-V**	40
MOSFET SMT RELAY	Tube	50	**G3VM-VF**	60
MOSFET SMT RELAY	Tape-and-reel	1500	**G3VM-VF(TR)**	60
MOSFET THRU-HOLE RELAY	Tube	50	**G3VM-W**	46
MOSFET SMT RELAY	Tube	50	**G3VM-WF**	68
MOSFET SMT RELAY	Tape-and-reel	1500	**G3VM-WF(TR)**	68
MOSFET SMT RELAY	Tube	50	**G3VM-WFL**	68
MOSFET SMT RELAY	Tape-and-reel	1500	**G3VM-WFL(TR)**	68
MOSFET THRU-HOLE RELAY	Tube	50	**G3VM-WL**	48

Specifications tables begin on the following page.

Specifications

G3VM-2, -2L, -351A

Maximum Rating

Parameter		Comments and conditions		G3VM-2	G3VM-2L	G3VM-351A
Contact form/no. of terminals		—		1 Form A/4 pins	1 Form A/4 pins	1 Form A/4 pins
Input (LED)	LED forward current	I_F	Typical	50 mA	50 mA	50 mA
		I_{FP} (100 μs pulse, 100 pps)	Max.	1 A	1 A	1 A
	Forward current derating	Ta ≥ 25°C		-0.5 mA/°C	-0.5 mA/°C	-0.5 mA/°C
	Reverse voltage	V_R	Max.	5 V	6 V	5 V
	Junction temperature (T_J)			125°C	125°C	125°C
Output (Detector)	Output voltage strength	V_{OFF}		350 V	350 V (AC or DC peak)	350 V
	Continuous load current	I_O		120 mA	120 mA	120 mA
	ON-state current derating	Ta ≥ 25°C		-1.2 mA/°C	-1.2 mA/°C	-1.2 mA/°C
	Junction temperature (T_J)			125°C	125°C	125°C
Dielectric strength		$V_{I/O}$ for 1 minute min.		2500 VAC	2500 VAC	2500 VAC
Temperature	Ambient	Ta with no icing		-20° to +85°C	-40° to +85°C	-40° to +85°C
	Storage	Tstg with no icing		-55° to +100°C	-55° to +125°C	-55° to +125°C

Electrical Characteristics

Parameter		Comments and conditions		G3VM-2	G3VM-2L	G3VM-351A
Input	LED forward voltage (V_F)	I_F=10 mA	Min.	1.0 V	1.0 V	1.0 V
			Typical	1.15 V	1.15 V	1.15 V
			Max.	1.3 V	1.3 V	1.3 V
	Reverse current	I_R	Max.	10 μA	10 μA	10 μA
	Reverse voltage	V_R	Max.	5 V	6 V	5 V
	Capacitance (C_T)	V = 0; freq. = 1 MHz	Typical	30 pF	30 pF	30 pF
	Keep ON LED current (I_{FT})	I_O = 120 mA	Typical	2 mA	1 mA	1 mA
			Max.	3 mA	3 mA	3 mA
Output	ON-resistance (R_{ON})	I_{ON}=120 mA I_F=5 mA	Typical	22 Ω	22 Ω	35 Ω (25 Ω, t< 1s)
			Max.	35 Ω	35 Ω	50 Ω (35 Ω, t< 1s)
	OFF-state leakage current (I_{LEAK})	V_{OFF} = 350 V	Max.	1.0 μA	1.0 μA	1.0 μA
	Limit current (I_{LIM})	I_F = 5 mA, V_{DD} = 5 V, t = 5 ms	Min.	—	150 mA	—
			Max.	—	300 mA	—
Transfer characteristics	I/O capacitance	($C_{I/O}$)	Typical	0.8 pF	0.8 pF	0.8 pF
	I/O resistance	(R_{IO})	Min.	1000 MΩ	1000 MΩ	1000 MΩ
	Operate time	(t_{ON})	Max.	1.0 ms	1.0 ms	1.0 ms
	Release time	(t_{OFF})	Max.	1.0 ms	1.0 ms	1.0 ms

Optimum Operating Conditions

Parameter	Comments and conditions		G3VM-2	G3VM-2L	G3VM-351A
Output voltage strength	V_{DD}	Max.	280 V	280 V	280 V
Operate LED forward current	I_F	Min.	5 mA	5 mA	5 mA
		Typical	7.5 mA	7.5 mA	7.5 mA
		Max.	25 mA	25 mA	25 mA
Continuous load current	I_O	Max.	100 mA	100 mA	100 mA
Ambient temperature	T_A		-20° to 65°C	-20° to 65°C	-20° to 65°C

Dimensions

Item	G3VM-2	G3VM-2L	G3VM-351A
Dimensions	See page 92	See page 92	See page 92

Connections

G3VM-2, 2L

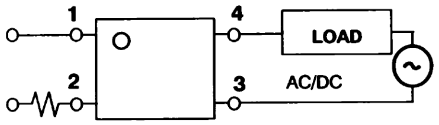

G3VM-2, 2L, 351A

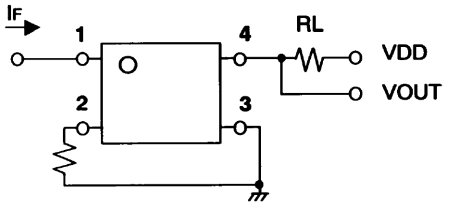

Timing Chart

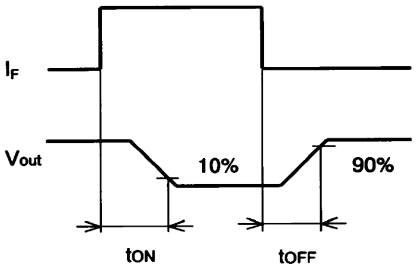

G3VM-353A, -401A, -61A

Maximum Rating

Parameter		Comments and conditions		G3VM-353A	G3VM-401A	G3VM-61A
Contact form/no. of terminals		—		1 Form B/4 pins	1 Form A/4 pins	1 Form A/4 pins
Input (LED)	LED forward current	I_F	Typical	50 mA	50 mA	50 mA
		I_{FP} (100 μs pulse, 100 pps)	Max.	1 A	1 A	1 A
	Forward current derating	Ta ≥ 25°C		-0.5 mA/°C	-0.5 mA/°C	-0.5 mA/°C
	Reverse voltage	V_R	Max.	5 V	5 V	5 V
	Junction temperature (T_J)			125°C	125°C	125°C
Output (Detector)	Output voltage strength	V_{OFF}		350 V	400 V	60 V
	Continuous load current	I_O		150 mA	120 mA	500 mA
	ON-state current derating	Ta ≥ 25°C		-1.5 mA/°C	-1.2 mA/°C	-5.0 mA/°C
	Junction temperature (T_J)			125°C	125°C	125°C
Dielectric strength		$V_{I/O}$ for 1 minute min.		2500 VAC	2500 VAC	2500 VAC
Temperature	Ambient	Ta with no icing		-40° to +85°C	-40° to +85°C	-40° to +85°C
	Storage	Tstg with no icing		-55° to +125°C	-55° to +125°C	-55° to +125°C

Electrical Characteristics

Parameter		Comments and conditions		G3VM-353A	G3VM-401A	G3VM-61A
Input	LED forward voltage (V_F)	I_F=10 mA	Min.	1.0 V	1.0 V	1.0 V
			Typical	1.15 V	1.15 V	1.15 V
			Max.	1.3 V	1.3 V	1.3 V
	Reverse current	I_R	Max.	10 μA	10 μA	10 μA
	Reverse voltage	V_R	Max.	5 V	5 V	5 V
	Capacitance (C_T)	V = 0; freq. = 1 MHz	Typical	30 pF	30 pF	30 pF
	Keep ON LED current (I_{FT})	I_O = 120 mA	Typical	1 mA	1 mA	1 mA
			Max.	3 mA	3 mA	3 mA
Output	ON-resistance (R_{ON})	I_{ON}=150 mA I_F=5 mA	Typical	15 Ω	18 Ω	1 Ω (I_{ON}=500 mA)
			Max.	25 Ω	35 Ω	2 Ω (I_{ON}=500 mA)
	OFF-state leakage current (I_{LEAK})	At V_{OFF}	Max.	1.0 μA	1.0 μA	1.0 μA
	Limit current (I_{LIM})	I_F = 5 mA, V_{DD} = 5 V, t = 5 ms	Min.	—	—	—
			Max.	—	—	—
Transfer characteristics	I/O capacitance	($C_{I/O}$)	Typical	0.8 pF	0.8 pF	0.8 pF
	I/O resistance	(R_{IO})	Min.	1000 MΩ	1000 MΩ	1000 MΩ
	Operate time	(t_{ON})	Max.	1.0 ms	1.0 ms	1.0 ms (I_F = 10 mA)
	Release time	(t_{OFF})	Max.	3.0 ms	1.0 ms	1.0 ms (I_F = 10 mA)

Optimum Operating Conditions

Parameter	Comments and conditions		G3VM-353A	G3VM-401A	G3VM-61A
Output voltage strength	V_{DD}	Max.	280 V	320 V	48 V
Operate LED forward current	I_F	Min.	5 mA	5 mA	5 mA
		Typical	—	7.5 mA	7.5 mA
		Max.	25 mA	25 mA	25 mA
Continuous load current	I_O	Max.	150 mA	100 mA	400 mA
Ambient temperature	T_A		-20° to 65°C	-20° to 65°C	-20° to 65°C

Dimensions

Item	G3VM-353A	G3VM-401A	G3VM-61A
Dimensions	See page 92	See page 92	See page 92

Connections

G3VM-353A

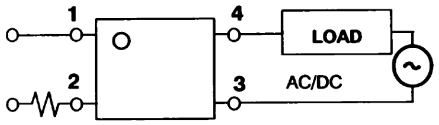

G3VM-353A, 401A, 61A

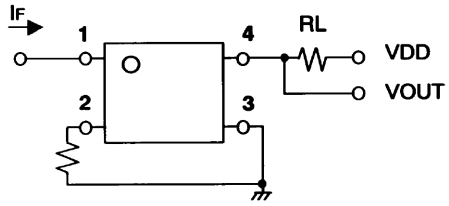

Timing Chart

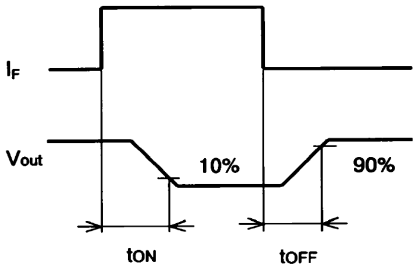

G3VM-61A1, -351B, -353B

Maximum Rating

Parameter		Comments and conditions		G3VM-61A1	G3VM-351B	G3VM-353B
Contact form/no. of terminals		—		1 Form A/4 pins	1 Form A/6 pins	1 Form B/6 pins
Input (LED)	LED forward current	I_F	Typical	50 mA	50 mA	50 mA
		I_{FP} (100 μs pulse, 100 pps)	Max.	1 A	1 A	1 A
	Forward current derating	Ta ≥ 25°C		-0.5 mA/°C	-0.5 mA/°C	-0.5 mA/°C
	Reverse voltage	V_R	Max.	5 V	5 V	5 V
	Junction temperature (T_J)			125°C	125°C	125°C
Output (Detector)	Output voltage strength	V_{OFF}		60 V	350 V	350 V
	Continuous load current	I_O		500 mA	120 mA (for A) 120 mA (for B) 240 mA (for C)	150 mA (for A) 150 mA (for B) 300 mA (for C)
	ON-state current derating	Ta ≥ 25°C		-5.0 mA/°C	-1.2 mA/°C (for A)	-1.5 mA/°C (for A)
	Junction temperature (T_J)			125°C	125°C	125°C
Dielectric strength		$V_{I/O}$ for 1 minute min.		2500 VAC	2500 VAC	2500 VAC
Temperature	Ambient	Ta with no icing		-40° to +85°C	-40° to +85°C	-40° to +85°C
	Storage	Tstg with no icing		-55° to +125°C	-55° to +125°C	-55° to +125°C

Electrical Characteristics

Parameter		Comments and conditions		G3VM-61A1	G3VM-351B	G3VM-353B
Input	LED forward voltage (V_F)	I_F=10 mA	Min.	1.0 V	1.0 V	1.0 V
			Typical	1.15 V	1.15 V	1.15 V
			Max.	1.3 V	1.3 V	1.3 V
	Reverse current	I_R	Max.	10 μA	10 μA	10 μA
	Reverse voltage	V_R	Max.	5 V	5 V	5 V
	Capacitance (C_T)	V = 0; freq. = 1 MHz	Typical	30 pF	30 pF	30 pF
	Keep ON LED current (I_{FT})	I_O = 120 mA	Typical	1.6 mA	1 mA	1 mA
			Max.	3 mA	3 mA	3 mA
Output	ON-resistance (R_{ON})	I_F=5 mA	Typical	1 Ω (I_{ON}=500 mA)	35 Ω (I_{ON}=120 mA) for connection A	15 Ω (I_{ON}=150 mA) for connection A
			Max.	2 Ω (I_{ON}=500 mA)	50 Ω (I_{ON}=120 mA) for connection A	25 Ω (I_{ON}=150 mA) for connection A
			Typical	—	28 Ω (I_{ON}=120 mA) for connection B	8 Ω (I_{ON}=150 mA) for connection B
			Max.	—	40 Ω (I_{ON}=120 mA) for connection B	14 Ω (I_{ON}=150 mA) for connection B
			Typical	—	14 Ω (I_{ON}=240 mA) for connection C	4 Ω (I_{ON}=300 mA) for connection C
			Max.	—	20 Ω (I_{ON}=240 mA) for connection C	7 Ω (I_{ON}=300 mA) for connection C
	OFF-state leakage current (I_{LEAK})	At V_{OFF}	Max.	1.0 μA	1.0 μA	1.0 μA
	Limit current (I_{LIM})	I_F = 5 mA, V_{DD} = 5 V, t = 5 ms	Min.	—	—	—
			Max.	—	—	—
Transfer characteristics	I/O capacitance	($C_{I/O}$)	Typical	0.8 pF	0.8 pF	0.8 pF
	I/O resistance	(R_{IO})	Min.	1000 MΩ	1000 MΩ	1000 MΩ
	Operate time	(t_{ON})	Max.	2.0 ms	1.0 ms	1.0 ms
	Release time	(t_{OFF})	Max.	0.5 ms	1.0 ms	3.0 ms

Optimum Operating Conditions

Parameter	Comments and conditions		G3VM-61A1	G3VM-351B	G3VM-353B
Output voltage strength	V_{DD}	Max.	48 V	280 V	280 V
Operate LED forward current	I_F	Min.	5 mA	5 mA	5 mA
		Typical	7.5 mA	10 mA	—
		Max.	25 mA	25 mA	25 mA
Continuous load current	I_O	Max.	500 mA	100 mA	150 mA
Ambient temperature	T_A		-20° to 65°C	-20° to 65°C	-20° to 65°C

Dimensions

Item	G3VM-61A1	G3VM-351B	G3VM-353B
Dimensions	See page 92	See page 92	See page 92

Connections

G3VM-61A1

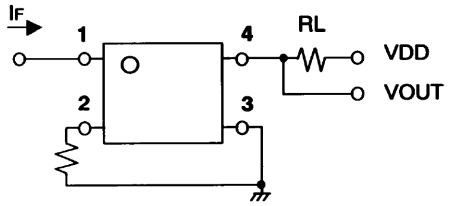

G3VM-351B, -353B

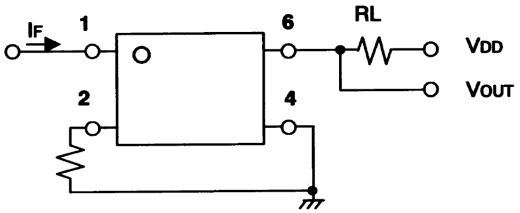

G3VM-351B, -353B

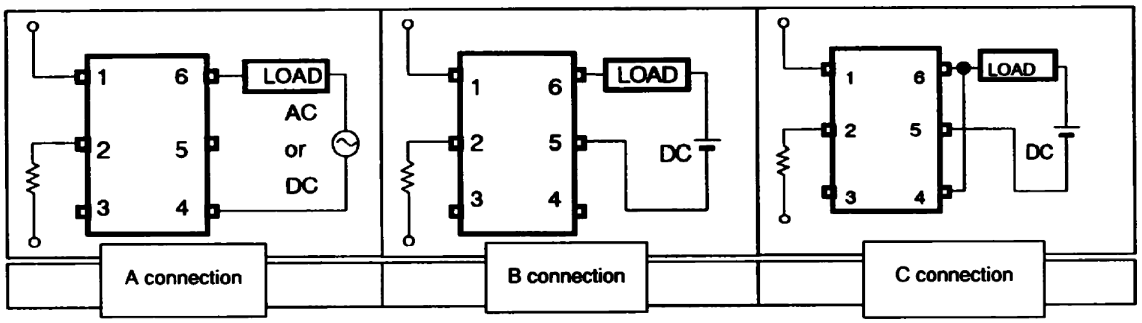

Timing Chart

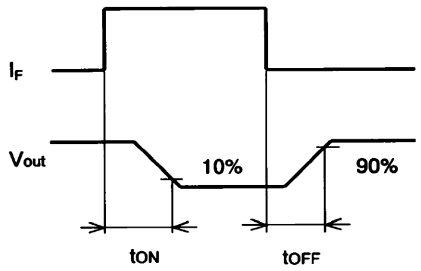

G3VM-3, -3L, -401B

Maximum Rating

Parameter		Comments and conditions		G3VM-3	G3VM-3L	G3VM-401B
Contact form/no. of terminals		—		1 Form A/6 pins	1 Form A/6 pins	1 Form A/6 pins
Input (LED)	LED forward current	I_F	Typical	50 mA	50 mA	50 mA
		I_{FP} (100 μs pulse, 100 pps)	Max.	1 A	1 A	1 A
	Forward current derating	Ta ≥ 25°C		-0.5 mA/°C	-0.5 mA/°C	-0.5 mA/°C
	Reverse voltage	V_R	Max.	5 V	5 V	5 V
	Junction temperature (T_J)			125°C	125°C	125°C
Output (Detector)	Output voltage strength	V_{OFF}		60 V	350 V	400 V
	Continuous load current	I_O		120 mA (for A) 120 mA (for B) 160 mA (for C)	120 mA	120 mA (for A) 120 mA (for B) 240 mA (for C)
	ON-state current derating	Ta ≥ 25°C		-1.2 mA/°C (for A)	-1.2 mA/°C	-1.2 mA/°C (for A)
	Junction temperature (T_J)			125°C	125°C	125°C
Dielectric strength		$V_{I/O}$ for 1 minute min.		2500 VAC	2500 VAC	2500 VAC
Temperature	Ambient	Ta with no icing		-20° to +85°C	-40° to +85°C	-40° to +85°C
	Storage	Tstg with no icing		-55° to +100°C	-55° to +125°C	-55° to +125°C

Electrical Characteristics

Parameter		Comments and conditions		G3VM-3	G3VM-3L	G3VM-401B
Input	LED forward voltage (V_F)	I_F=10 mA	Min.	1.0 V	1.0 V	1.0 V
			Typical	1.15 V	1.15 V	1.15 V
			Max.	1.3 V	1.3 V	1.3 V
	Reverse current	I_R	Max.	10 μA	10 μA	10 μA
	Reverse voltage	V_R	Max.	5 V	5 V	5 V
	Capacitance (C_T)	V = 0; freq. = 1 MHz	Typical	30 pF	30 pF	30 pF
	Keep ON LED current (I_{FT})	At I_O	Typical	—	—	1 mA
			Max.	3 mA	3 mA	3 mA
Output	ON-resistance (R_{ON})	I_F=5 mA	Typical	22 Ω (I_{ON}=120 mA) for connection A	22 Ω (I_{ON}=120 mA)	17 Ω (I_{ON}=120 mA) for connection A
			Max.	35 Ω (I_{ON}=120 mA) for connection A	35 Ω (I_{ON}=120 mA)	35 Ω (I_{ON}=120 mA) for connection A
			Typical	16 Ω (I_{ON}=120 mA) for connection B	—	11 Ω (I_{ON}=120 mA) for connection B
			Max.	23 Ω (I_{ON}=120 mA) for connection B	—	20 Ω (I_{ON}=120 mA) for connection B
			Typical	8 Ω (I_{ON}=160 mA) for connection C	—	6 Ω (I_{ON}=240 mA) for connection C
			Max.	12 Ω (I_{ON}=160 mA) for connection C	—	10 Ω (I_{ON}=240 mA) for connection C
	OFF-state leakage current (I_{LEAK})	At V_{OFF}	Max.	1.0 μA	1.0 μA	1.0 μA
	Limit current (I_{LIM})	I_F = 5 mA, V_{DD} = 5 V, t = 5 ms	Min.	—	150 mA	—
			Max.	—	300 mA	—
Transfer characteristics	I/O capacitance	($C_{I/O}$)	Typical	0.8 pF	0.8 pF	0.8 pF
	I/O resistance	(R_{IO})	Min.	1000 MΩ	1000 MΩ	1000 MΩ
	Operate time	(t_{ON})	Max.	1.0 ms	1.0 ms	1.0 ms
	Release time	(t_{OFF})	Max.	1.0 ms	1.0 ms	1.0 ms

Optimum Operating Conditions

Parameter	Comments and conditions		G3VM-3	G3VM-3L	G3VM-401B
Output voltage strength	V_{DD}	Max.	280 V	280 V	320 V
Operate LED forward current	I_F	Min.	5 mA	5 mA	5 mA
		Typical	7.5 mA	10 mA	7.5 mA
		Max.	25 mA	25 mA	25 mA
Continuous load current	I_O	Max.	120 mA	120 mA	120 mA
Ambient temperature	T_A		-20° to 65°C	-20° to 65°C	-20° to 65°C

Dimensions

Item	G3VM-3	G3VM-3L	G3VM-401B
Dimensions	See page 92	See page 92	See page 92

Connections

G3VM-3L

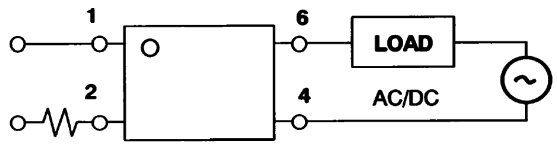

G3VM-3, -3L, -401B

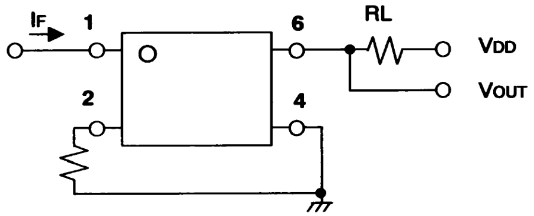

G3VM-3, -401B

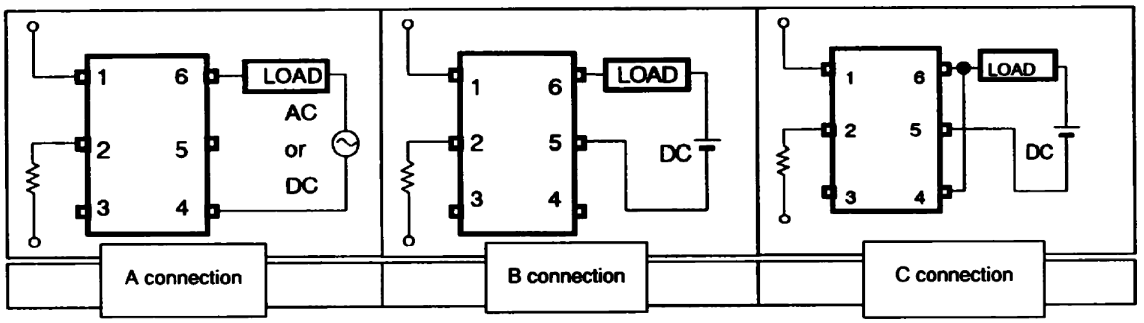

Timing Chart

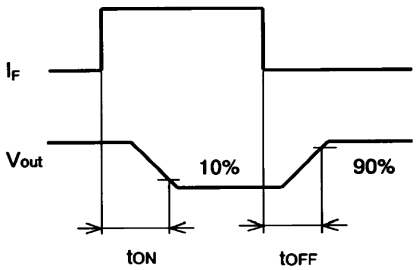

G3VM-401BY, -601BY, -61B

Maximum Rating

Parameter		Comments and conditions		G3VM-401BY	G3VM-601BY	G3VM-61B
Contact form/no. of terminals		—		1 Form A/6 pins	1 Form A/6 pins	1 Form A/6 pins
Input (LED)	LED forward current	I_F	Typical	50 mA	50 mA	50 mA
		I_{FP} (100 μs pulse, 100 pps)	Max.	1 A	1 A	1 A
	Forward current derating	Ta ≥ 25°C		-0.5 mA/°C	-0.5 mA/°C	-0.5 mA/°C
	Reverse voltage	V_R	Max.	5 V	5 V	5 V
	Junction temperature (T_J)			125°C	125°C	125°C
Output (Detector)	Output voltage strength	V_{OFF}		400 V	600 V	60 V
	Continuous load current	I_O		120 mA (for A) 120 mA (for B) 240 mA (for C)	100 mA (for A) 100 mA (for B) 200 mA (for C)	500 mA (for A) 500 mA (for B) 1000 mA (for C)
	ON-state current derating	Ta ≥ 25°C		-1.2 mA/°C (for A)	-1.0 mA/°C (for A)	-5.0 mA/°C (for A)
	Junction temperature (T_J)			125°C	125°C	125°C
Dielectric strength		$V_{I/O}$ for 1 minute min.		5000 VAC	5000 VAC	2500 VAC
Temperature	Ambient	Ta with no icing		-40° to +85°C	-40° to +85°C	-40° to +85°C
	Storage	Tstg with no icing		-55° to +125°C	-55° to +125°C	-55° to +125°C

Electrical Characteristics

Parameter		Comments and conditions		G3VM-401BY	G3VM-601BY	G3VM-61B
Input	LED forward voltage (V_F)	I_F=10 mA	Min.	1.0 V	1.0 V	1.0 V
			Typical	1.15 V	1.15 V	1.15 V
			Max.	1.3 V	1.3 V	1.3 V
	Reverse current	I_R	Max.	10 μA	10 μA	10 μA
	Reverse voltage	V_R	Max.	5 V	5 V	5 V
	Capacitance (C_T)	V = 0; freq. = 1 MHz	Typical	30 pF	30 pF	30 pF
	Keep ON LED current (I_{FT})	At I_O	Typical	—		—
			Max.	3 mA	5 mA	3 mA
Output	ON-resistance (R_{ON})	I_F=5 mA	Typical	17 Ω (I_{ON}=120 mA) for connection A	30 Ω (I_{ON}=100 mA) for connection A	1 Ω (I_{ON}=500 mA) for connection A
			Max.	35 Ω (I_{ON}=120 mA) for connection A	45 Ω (I_{ON}=100 mA) for connection A	2 Ω (I_{ON}=500 mA) for connection A
			Typical	11 Ω (I_{ON}=120 mA) for connection B	23 Ω (I_{ON}=100 mA) for connection B	0.5 Ω (I_{ON}=500 mA) for connection B
			Max.	20 Ω (I_{ON}=120 mA) for connection B	35 Ω (I_{ON}=100 mA) for connection B	1 Ω (I_{ON}=500 mA) for connection B
			Typical	6 Ω (I_{ON}=240 mA) for connection C	12 Ω (I_{ON}=200 mA) for connection C	0.3 Ω (I_{ON}=1000 mA) for connection C
			Max.	10 Ω (I_{ON}=240 mA) for connection C	18 Ω (I_{ON}=200 mA) for connection C	—
	OFF-state leakage current (I_{LEAK})	At V_{OFF}	Max.	1.0 μA	1.0 μA	1.0 μA
	Limit current (I_{LIM})	I_F = 5 mA, V_{DD} = 5 V, t = 5 ms	Min.	—	—	—
			Max.	—	—	—
Transfer characteristics	I/O capacitance	($C_{I/O}$)	Typical	0.8 pF	0.8 pF	0.8 pF
	I/O resistance	(R_{IO})	Min.	1000 MΩ	1000 MΩ	1000 MΩ
	Operate time	(t_{ON})	Max.	1.0 ms	1.5 ms	1.0 ms
	Release time	(t_{OFF})	Max.	1.0 ms	1.0 ms	1.0 ms

Optimum Operating Conditions

Parameter	Comments and conditions		G3VM-401BY	G3VM-601BY	G3VM-61B
Output voltage strength	V_{DD}	Max.	320 V	480 V	48 V
Operate LED forward current	I_F	Min.	5 mA	7.5 mA	5 mA
		Typical	7.5 mA	15 mA	7.5 mA
		Max.	25 mA	25 mA	25 mA
Continuous load current	I_O	Max.	120 mA	100 mA	400 mA
Ambient temperature	T_A		-20° to 65°C	-20° to 65°C	-20° to 65°C

Dimensions

Item	G3VM-401BY	G3VM-601BY	G3VM-61B
Dimensions	See page 92	See page 92	See page 92

Connections

G3VM-401BY, -601BY, -61B

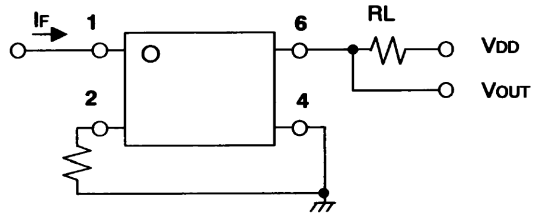

G3VM-401BY, -601BY, -61B

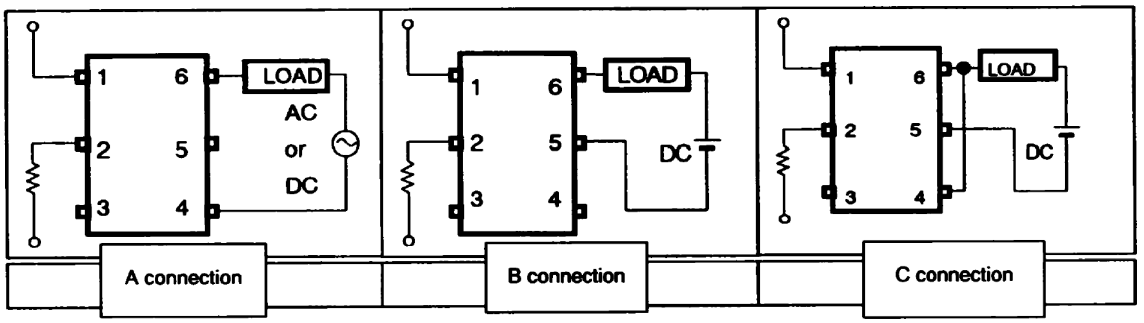

Timing Chart

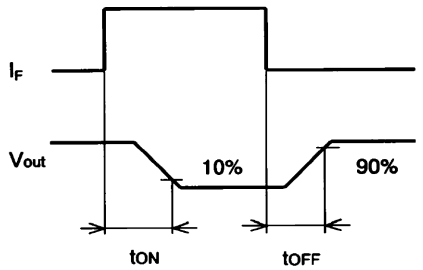

G3VM-61B1, -V

Maximum Rating

Parameter		Comments and conditions		G3VM-61B1	G3VM-V
Contact form/no. of terminals		—		1 Form A/6 pins	1 Form A/6 pins
Input (LED)	LED forward current	I_F	Typical	50 mA	50 mA
		I_{FP} (100 μs pulse, 100 pps)	Max.	1 A	1 A
	Forward current derating	Ta ≥ 25°C		-0.5 mA/°C	-0.5 mA/°C
	Reverse voltage	V_R	Max.	5 V	5 V
	Junction temperature (T_J)			125°C	125°C
Output (Detector)	Output voltage strength	V_{OFF}		60 V	60 V
	Continuous load current	I_O		500 mA (for A) 500 mA (for B) 1000 mA (for C)	300 mA (for A) 450 mA (for B) 600 mA (for C)
	ON-state current derating	Ta ≥ 25°C		-5.0 mA/°C (for A)	-3.0 mA/°C (for A)
	Junction temperature (T_J)			125°C	125°C
Dielectric strength		$V_{I/O}$ for 1 minute min.		2500 VAC	2500 VAC
Temperature	Ambient	Ta with no icing		-40° to +85°C	-20° to +85°C
	Storage	Tstg with no icing		-55° to +125°C	-55° to +100°C

Electrical Characteristics

Parameter		Comments and conditions		G3VM-61B1	G3VM-V
Input	LED forward voltage (V_F)	I_F=10 mA	Min.	1.0 V	1.0 V
			Typical	1.15 V	1.15 V
			Max.	1.3 V	1.3 V
	Reverse current	I_R	Max.	10 μA	10 μA
	Reverse voltage	V_R	Max.	5 V	5 V
	Capacitance (C_T)	V = 0; freq. = 1 MHz	Typical	30 pF	30 pF
	Keep ON LED current (I_{FT})	At I_O	Typical	1.6 mA	1 mA
			Max.	3 mA	5 mA
Output	ON-resistance (R_{ON})	I_F=5 mA	Typical	1 Ω (I_{ON}=500 mA) for connection A	1.4 Ω (I_{ON}=300 mA) for connection A
			Max.	2 Ω (I_{ON}=500 mA) for connection A	2 Ω (I_{ON}=300 mA) for connection A
			Typical	0.5 Ω (I_{ON}=500 mA) for connection B	0.7 Ω (I_{ON}=450 mA) for connection B
			Max.	1 Ω (I_{ON}=500 mA) for connection B	1 Ω (I_{ON}=450 mA) for connection B
			Typical	0.25 Ω (I_{ON}=1000 mA) for connection C	0.35 Ω (I_{ON}=600 mA) for connection C
			Max.	—	0.5 Ω (I_{ON}=600 mA) for connection C
	OFF-state leakage current (I_{LEAK})	At V_{OFF}	Max.	1.0 μA	1.0 μA
	Limit current (I_{LIM})	I_F = 5 mA, V_{DD} = 5 V, t = 5 ms	Min.	—	—
			Max.	—	—
Transfer characteristics	I/O capacitance	($C_{I/O}$)	Typical	0.8 pF	0.8 pF
	I/O resistance	(R_{IO})	Min.	1000 MΩ	1000 MΩ
	Operate time	(t_{ON})	Max.	2.0 ms	1.0 ms
	Release time	(t_{OFF})	Max.	0.5 ms	1.0 ms

Optimum Operating Conditions

Parameter	Comments and conditions		G3VM-61B1	G3VM-V
Output voltage strength	V_{DD}	Max.	48 V	48V
Operate LED forward current	I_F	Min.	5 mA	7.5 mA
		Typical	7.5 mA	15 mA
		Max.	25 mA	25 mA
Continuous load current	I_O	Max.	500 mA	300 mA
Ambient temperature	T_A		-20° to 65°C	-20° to 80°C

Dimensions

Item	G3VM-61B1	G3VM-V
Dimensions	See page 92	See page 92

Connections

G3VM-61B1, -V

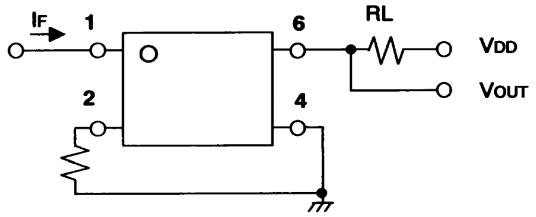

G3VM-61B1, -V

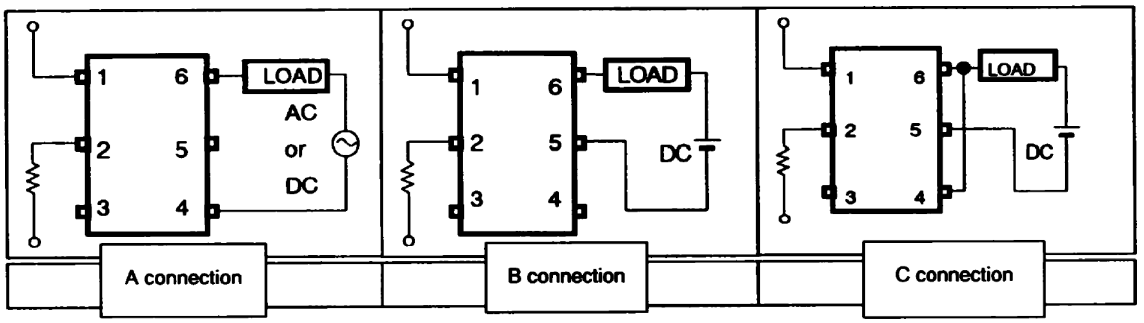

Timing Chart

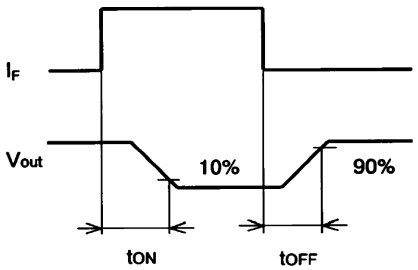

G3VM-61CP

Maximum Rating

Parameter		Comments and conditions		G3VM-61CP
Contact form/no. of terminals		—		1 Form A/8 pins
Input (LED)	LED forward current	I_F	Typical	50 mA
		I_{FP} (100 μs pulse, 100 pps)	Max.	1 A
	Forward current derating	Ta ≥ 25°C		-0.5 mA/°C
	Reverse voltage	V_R	Max.	6 V
	Junction temperature (T_J)			125°C
Output (Detector)	Output voltage strength	V_{OFF}		60 V
	Continuous load current	I_O		500 mA
	ON-state current derating	Ta ≥ 25°C		-5.0 mA/°C
	Junction temperature (T_J)			125°C
Dielectric strength		$V_{I/O}$ for 1 minute min.		2500 VAC
Temperature	Ambient	Ta with no icing		-40° to +85°C
	Storage	Tstg with no icing		-55° to +125°C

Electrical Characteristics

Parameter		Comments and conditions		G3VM-61CP
Input	LED forward voltage (V_F)	I_F=10 mA	Min.	1.0 V
			Typical	1.2 V
			Max.	1.4 V
	Reverse current	I_R	Max.	15 μA
	Reverse voltage	V_R	Max.	6 V
	Capacitance (C_T)	V = 0; freq. = 1 MHz	Typical	15 pF
	Keep ON LED current (I_{FT})	At I_O	Typical	—
			Max.	5 mA
Output	ON-resistance (R_{ON})	I_F=5 mA	Typical	0.3 Ω (I_{ON}=500 mA)
			Max.	0.6 Ω (I_{ON}=500 mA)
			Typical	—
			Max.	—
			Typical	—
			Max.	—
	OFF-state leakage current (I_{LEAK})	At V_{OFF}	Max.	1.0 μA
	Capacitance	COFF	Typical	200 pF
			Max.	500 pF
Transfer characteristics	I/O capacitance	($C_{I/O}$)	Typical	0.8 pF
	I/O resistance	(R_{IO})	Min.	1000 MΩ
	Operate time	(t_{ON})	Max.	2.0 ms
	Release time	(t_{OFF})	Max.	0.5 ms

Optimum Operating Conditions

Parameter	Comments and conditions		G3VM-61CP
Output voltage strength	V_{DD}	Max.	48 V
Operate LED forward current	I_F	Min.	10 mA
		Typical	— mA
		Max.	30 mA
Continuous load current	I_O	Max.	500 mA
Ambient temperature	T_A		-25° to 50°C

Dimensions

Item	G3VM-61CP
Dimensions	See page 93

Connections

G3VM-61CP

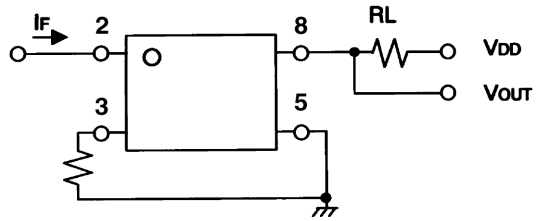

Timing Chart

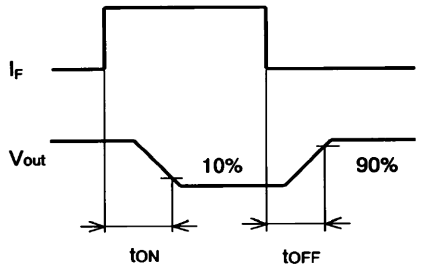

G3VM-61CR, 355CR, 352C

Maximum Rating

Parameter		Comments and conditions		G3VM-61CR	G3VM-355CR	G3VM-352C
Contact form/no. of terminals		—		1 Form A/8 pins	1FormA+1FormB/ 8 pins	2 Form A/8 pins
Input (LED)	LED forward current	I_F	Typical	50 mA	50 mA	50 mA
		I_{FP} (100 μs pulse, 100 pps)	Max.	1 A	1 A	1 A
	Forward current derating	Ta ≥ 25°C		-0.5 mA/°C	-0.5 mA/°C	-0.5 mA/°C
	Reverse voltage	V_R	Max.	6 V	5 V	5 V
	Junction temperature (T_J)			125°C	125°C	125°C
Output (Detector)	Output voltage strength	V_{OFF}		60 V	350 V	350 V
	Continuous load current	I_O		2000 mA	120 mA	120 mA
	ON-state current derating	Ta ≥ 25°C		-20 mA/°C	-1.2 mA/°C	-1.2 mA/°C
	Junction temperature (T_J)			125°C	125°C	125°C
Dielectric strength		$V_{I/O}$ for 1 minute min.		1500 VAC	2500 VAC	2500 VAC
Temperature	Ambient	Ta with no icing		-20° to +85°C	-40° to +85°C	-40° to +85°C
	Storage	Tstg with no icing		-55° to +125°C	-55° to +125°C	-55° to +100°C

Electrical Characteristics

Parameter		Comments and conditions		G3VM-61CR	G3VM-355CR	G3VM-352C
Input	LED forward voltage (V_F)	I_F=10 mA	Min.	1.0 V	1.0 V	1.0 V
			Typical	1.2 V	1.15 V	1.15 V
			Max.	1.4 V	1.3 V	1.3 V
	Reverse current	I_R	Max.	10 μA	10 μA	10 μA
	Reverse voltage	V_R	Max.	6 V	5 V	5 V
	Capacitance (C_T)	V = 0; freq. = 1 MHz	Typical	15 pF	30 pF	30 pF
	Keep ON LED current (I_{FT})	At I_O	Typical	—	1 mA	1 mA
			Max.	5 mA	3 mA	3 mA
Output	ON-resistance (R_{ON})	I_F=5 mA (1a)	Typical	—	15 Ω (I_{ON}=120 mA)	35 Ω (25 Ω, t ≤ 1s)
			Max.	0.12 Ω	25 Ω (I_{ON}=120 mA)	50 Ω (35 Ω, t ≤ 1s)
		I_F=0 mA (1b)	Typical	—	15 Ω (I_{ON}=120 mA)	—
			Max.	—	25 Ω (I_{ON}=120 mA)	—
			Typical	—	—	—
			Max.	—	—	—
	OFF-state leakage current (I_{LEAK})	At V_{OFF}	Max.	4.0 μA	1.0 μA	1.0 μA
	Capacitance	COFF	Typical	—	—	— pF
			Max.	—	—	— pF
Transfer characteristics	I/O capacitance	($C_{I/O}$)	Typical	0.8 pF	0.8 pF	0.8 pF
	I/O resistance	(R_{IO})	Min.	1000 MΩ	1000 MΩ	1000 MΩ
	Operate time	(t_{ON})	Max.	5.0 ms	1.0 ms	1.0 ms
	Release time	(t_{OFF})	Max.	3.5 ms	3.0 ms	1.0 ms

Optimum Operating Conditions

Parameter	Comments and conditions		G3VM-61CR	G3VM-355CR	G3VM-352C
Output voltage strength	V_{DD}	Max.	48 V	280V	280 V
Operate LED forward current	I_F	Min.	10 mA	5 mA	5 mA
		Typical	— mA	—	7.5 mA
		Max.	30 mA	25 mA	25 mA
Continuous load current	I_O	Max.	2000 mA	120 mA	100 mA
Ambient temperature	T_A		-25° to 50°C	-20° to 65°C	-20° to 65°C

Dimensions

Item	G3VM-61CR	G3VM-355CR	G3VM-352C
Dimensions	See page 93	See page 93	See page 93

Connections

G3VM-61CR

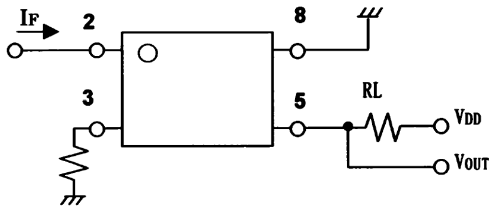

G3VM-352C

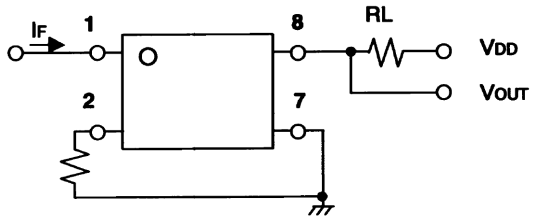

G3VM-355CR

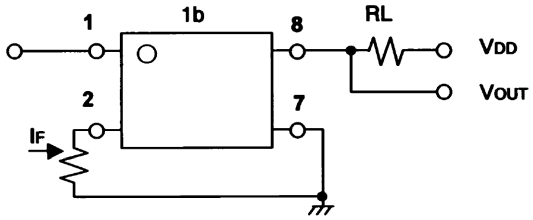

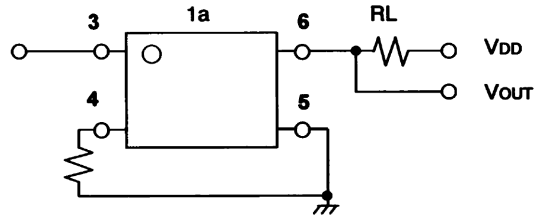

Timing Chart

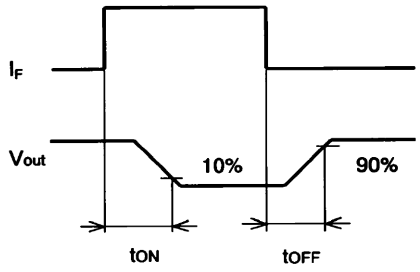

G3VM-402C, -62C1, -W

Maximum Rating

Parameter		Comments and conditions		G3VM-402C	G3VM-62C1	G3VM-W
Contact form/no. of terminals		—		2 Form A/8 pins	2 Form A/8 pins	2 Form A/8 pins
Input (LED)	LED forward current	I_F	Typical	50 mA	50 mA	50 mA
		I_{FP} (100 μs pulse, 100 pps)	Max.	1 A	1 A	1 A
	Forward current derating	Ta ≥ 25°C		-0.5 mA/°C	-0.5 mA/°C	-0.5 mA/°C
	Reverse voltage	V_R	Max.	5 V	5 V	5 V
	Junction temperature (T_J)			125°C	125°C	125°C
Output (Detector)	Output voltage strength	V_{OFF}		400 V	60 V	350 V
	Continuous load current	I_O		120 mA	500 mA	120 mA
	ON-state current derating	Ta ≥ 25°C		-1.2 mA/°C	-5.0 mA/°C	-1.2 mA/°C
	Junction temperature (T_J)			125°C	125°C	125°C
Dielectric strength		$V_{I/O}$ for 1 minute min.		2500 VAC	2500 VAC	2500 VAC
Temperature	Ambient	Ta with no icing		-40° to +85°C	-40° to +85°C	-20° to +85°C
	Storage	Tstg with no icing		-55° to +125°C	-55° to +125°C	-55° to +100°C

Electrical Characteristics

Parameter		Comments and conditions		G3VM-402C	G3VM-62C1	G3VM-W
Input	LED forward voltage (V_F)	I_F=10 mA	Min.	1.0 V	1.0 V	1.0 V
			Typical	1.15 V	1.15 V	1.15 V
			Max.	1.3 V	1.3 V	1.3 V
	Reverse current	I_R	Max.	10 μA	10 μA	10 μA
	Reverse voltage	V_R	Max.	5 V	5 V	5 V
	Capacitance (C_T)	V = 0; freq. = 1 MHz	Typical	30 pF	30 pF	30 pF
	Keep ON LED current (I_{FT})	At I_O	Typical	1	1.6 mA	2 mA
			Max.	3 mA	3 mA	3 mA
Output	ON-resistance (R_{ON})	I_F=5 mA (1a)	Typical	18 Ω (I_{ON}=120 mA)	1.0 Ω (I_{ON}=500 mA)	22 Ω (I_{ON}=120 mA)
			Max.	35 Ω (I_{ON}=120 mA)	2.0 Ω (I_{ON}=500 mA)	35 Ω (I_{ON}=120 mA)
		I_F=0 mA (1b)	Typical	—	—	—
			Max.	—	—	—
			Typical	—	—	—
			Max.	—	—	—
	OFF-state leakage current (I_{LEAK})	At V_{OFF}	Max.	1.0 μA	1.0 μA	1.0 μA
	Capacitance	COFF	Typical	—	—	—
			Max.	—	—	—
Transfer characteristics	I/O capacitance	($C_{I/O}$)	Typical	0.8 pF	0.8 pF	0.8 pF
	I/O resistance	(R_{IO})	Min.	1000 MΩ	1000 MΩ	1000 MΩ
	Operate time	(t_{ON})	Max.	1.0 ms	2.0 ms	1.0 ms
	Release time	(t_{OFF})	Max.	1.0 ms	0.5 ms	1.0 ms

Optimum Operating Conditions

Parameter	Comments and conditions		G3VM-402C	G3VM-62C1	G3VM-W
Output voltage strength	V_{DD}	Max.	320 V	48 V	280 V
Operate LED forward current	I_F	Min.	5 mA	5 mA	5 mA
		Typical	7.5 mA	7.5	7.5 mA
		Max.	25 mA	25 mA	25 mA
Continuous load current	I_O	Max.	100 mA	500 mA	100 mA
Ambient temperature	T_A		-20° to 65°C	-20° to 65°C	-20° to 65°C

Dimensions

Item	G3VM-402C	G3VM-62C1	G3VM-W
Dimensions	See page 93	See page 93	See page 93

Connections

G3VM-402C, -62C1, -W

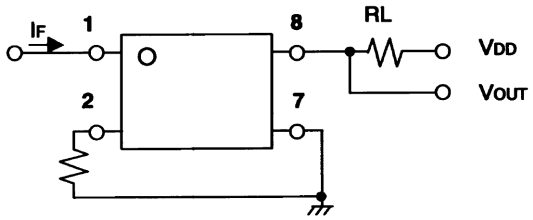

Timing Chart

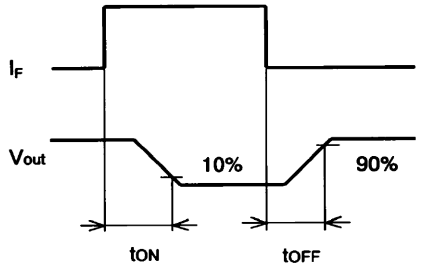

G3VM-WL, -354C

Maximum Rating

Parameter		Comments and conditions		G3VM-WL	G3VM-354C
Contact form/no. of terminals		—		2 Form A/8 pins	2 Form B/8 pins
Input (LED)	LED forward current	I_F	Typical	50 mA	50 mA
		I_{FP} (100 μs pulse, 100 pps)	Max.	1 A	1 A
	Forward current derating	Ta ≥ 25°C		-0.5 mA/°C	-0.5 mA/°C
	Reverse voltage	V_R	Max.	6 V	5 V
	Junction temperature (T_J)			125°C	125°C
Output (Detector)	Output voltage strength	V_{OFF}		350 V	350 V
	Continuous load current	I_O		120 mA	150 mA
	ON-state current derating	Ta ≥ 25°C		-1.2 mA/°C	-1.5 mA/°C
	Junction temperature (T_J)			125°C	125°C
Dielectric strength		$V_{I/O}$ for 1 minute min.		2500 VAC	2500 VAC
Temperature	Ambient	Ta with no icing		-40° to +85°C	-40° to +85°C
	Storage	Tstg with no icing		-55° to +125°C	-55° to +125°C

Electrical Characteristics

Parameter		Comments and conditions		G3VM-WL	G3VM-354C
Input	LED forward voltage (V_F)	I_F=10 mA	Min.	1.0 V	1.0 V
			Typical	1.15 V	1.15 V
			Max.	1.3 V	1.3 V
	Reverse current	I_R	Max.	10 μA	10 μA
	Reverse voltage	V_R	Max.	6 V	5 V
	Capacitance (C_T)	V = 0; freq. = 1 MHz	Typical	30 pF	30 pF
	Keep ON LED current (I_{FT})	At I_O	Typical	1	1 mA
			Max.	3 mA	3 mA
Output	ON-resistance (R_{ON})	I_F=5 mA	Typical	22 Ω (I_{ON}=120 mA)	15 Ω (I_{ON}=150 mA)
			Max.	35 Ω (I_{ON}=120 mA)	25 Ω (I_{ON}=150 mA)
			Typical	—	—
			Max.	—	—
			Typical	—	—
			Max.	—	—
	OFF-state leakage current (I_{LEAK})	At V_{OFF}	Max.	1.0 μA	1.0 μA
	Limit current	I_{LIM}	Min.	150 mA	—
			Max.	300 mA	—
Transfer characteristics	I/O capacitance	($C_{I/O}$)	Typical	0.8 pF	0.8 pF
	I/O resistance	(R_{IO})	Min.	1000 MΩ	1000 MΩ
	Operate time	(t_{ON})	Max.	1.0 ms	1.0 ms
	Release time	(t_{OFF})	Max.	1.0 ms	3.0 ms

Optimum Operating Conditions

Parameter	Comments and conditions		G3VM-WL	G3VM-354C
Output voltage strength	V_{DD}	Max.	280 V	280 V
Operate LED forward current	I_F	Min.	5 mA	5 mA
		Typical	7.5 mA	—
		Max.	25 mA	25 mA
Continuous load current	I_O	Max.	100 mA	150 mA
Ambient temperature	T_A		-20° to 65°C	-20° to 65°C

Dimensions

Item	G3VM-WL	G3VM-354C
Dimensions	See page 93	See page 93

Connections

G3VM-WL, -354C

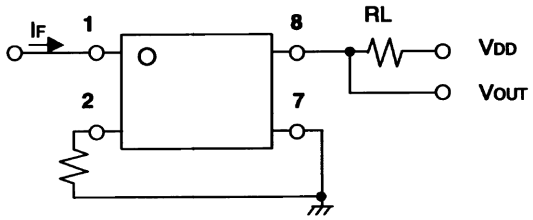

Timing Chart

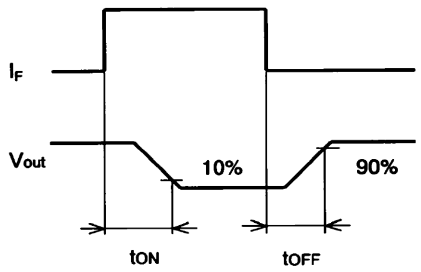

G3VM-2F(TR), -2FL(TR), -351D(TR)

Maximum Rating

Parameter		Comments and conditions		G3VM-2F, G3VM-2F(TR)	G3VM-2FL, G3VM-2FL(TR)	G3VM-351D, G3VM-351D(TR)
Contact form/no. of terminals		—		1 Form A/4 pins	1 Form A/4 pins	1 Form A/4 pins
Input (LED)	LED forward current	I_F	Typical	50 mA	50 mA	50 mA
		I_{FP} (100 μs pulse, 100 pps)	Max.	1 A	1 A	1 A
	Forward current derating	Ta ≥ 25°C		-0.5 mA/°C	-0.5 mA/°C	-0.5 mA/°C
	Reverse voltage	V_R	Max.	5 V	6 V	5 V
	Junction temperature (T_J)			125°C	125°C	125°C
Output (Detector)	Output voltage strength	V_{OFF}		350 V	350 V	350 V
	Continuous load current	I_O		120 mA	120 mA	120 mA
	ON-state current derating	Ta ≥ 25°C		-1.2 mA/°C	-1.2 mA/°C	-1.2 mA/°C
	Junction temperature (T_J)			125°C	125°C	125°C
Dielectric strength		$V_{I/O}$ for 1 minute min.		2500 VAC	2500 VAC	2500 VAC
Temperature	Ambient	Ta with no icing		-20° to +85°C	-40° to +85°C	-40° to +85°C
	Storage	Tstg with no icing		-55° to +100°C	-55° to +125°C	-55° to +100°C

Electrical Characteristics

Parameter		Comments and conditions		G3VM-2F, G3VM-2F(TR)	G3VM-2FL, G3VM-2FL(TR)	G3VM-351D, G3VM-351D(TR)
Input	LED forward voltage (V_F)	I_F=10 mA	Min.	1.0 V	1.0 V	1.0 V
			Typical	1.15 V	1.15 V	1.15 V
			Max.	1.3 V	1.3 V	1.3 V
	Reverse current	I_R	Max.	10 μA	10 μA	10 μA
	Reverse voltage	V_R	Max.	5 V	6 V	5 V
	Capacitance (C_T)	V = 0; freq. = 1 MHz	Typical	30 pF	30 pF	30 pF
	Keep ON LED current (I_{FT})	At I_O	Typical	2 mA (I_O = 100 mA)	1 mA (I_O = 120 mA)	1 mA (I_O = 120 mA)
			Max.	3 mA (I_O = 100 mA	3 mA (I_O = 120 mA)	3 mA (I_O = 120 mA)
Output	ON-resistance (R_{ON})	I_{ON}=120 mA I_F=5 mA	Typical	22 Ω	22 Ω	35 Ω (25 Ω, t< 1s)
			Max.	35 Ω	35 Ω	50 Ω (35 Ω, t< 1s)
	OFF-state leakage current (I_{LEAK})	V_{OFF} = 350 V	Max.	1.0 μA	1.0 μA	1.0 μA
	Limit current (I_{LIM})	I_F = 5 mA, V_{DD} = 5 V, t = 5 ms	Min.	—	150 mA	—
			Max.	—	300 mA	—
Transfer characteristics	I/O capacitance	($C_{I/O}$)	Typical	0.8 pF	0.8 pF	0.8 pF
	I/O resistance	(R_{IO})	Min.	1000 MΩ	1000 MΩ	1000 MΩ
	Operate time	(t_{ON})	Max.	1.0 ms	1.0 ms	1.0 ms
	Release time	(t_{OFF})	Max.	1.0 ms	1.0 ms	1.0 ms

Optimum Operating Conditions

Parameter	Comments and conditions		G3VM-2F, G3VM-2F(TR)	G3VM-2FL, G3VM-2FL(TR)	G3VM-351D, G3VM-351D(TR)
Output voltage strength	V_{DD}	Max.	280 V	280 V	280 V
Operate LED forward current	I_F	Min.	5 mA	5 mA	5 mA
		Typical	7.5 mA	7.5 mA	7.5 mA
		Max.	25 mA	25 mA	25 mA
Continuous load current	I_O	Max.	100 mA	100 mA	100 mA
Ambient temperature	T_A		-20° to 65°C	-20° to 65°C	-20° to 65°C

Dimensions

Item	G3VM-2F, G3VM-2F(TR)	G3VM-2FL, G3VM-2FL(TR)	G3VM-351D, G3VM-351D(TR)
Dimensions	See pages 94, 98	See pages 94, 98	See pages 94, 98

Connections

G3VM-2F, -2F(TR), -2FL, -2FL(TR)

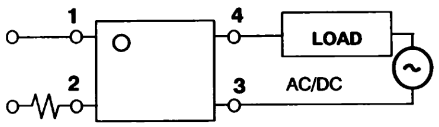

G3VM-2F, -2F(TR), -2FL, -2FL(TR), -351D, -351D(TR)

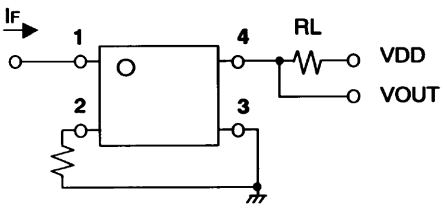

Timing Chart

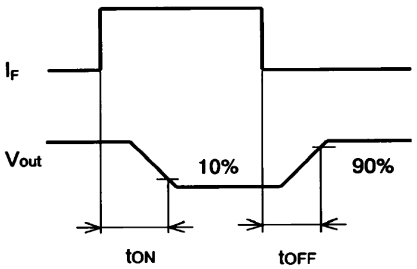

G3VM-353D(TR), -401D(TR), -61D(TR)

Maximum Rating

Parameter		Comments and conditions		G3VM-353D, G3VM-353D(TR)	G3VM-401D, G3VM-401D(TR)	G3VM-61D, G3VM-61D(TR)
Contact form/no. of terminals		—		1 Form B/4 pins	1 Form A/4 pins	1 Form A/4 pins
Input (LED)	LED forward current	I_F	Typical	50 mA	50 mA	50 mA
		I_{FP} (100 μs pulse, 100 pps)	Max.	1 A	1 A	1 A
	Forward current derating	Ta ≥ 25°C		-0.5 mA/°C	-0.5 mA/°C	-0.5 mA/°C
	Reverse voltage	V_R	Max.	5 V	5 V	5 V
	Junction temperature (T_J)			125°C	125°C	125°C
Output (Detector)	Output voltage strength	V_{OFF}		350 V	400 V	60 V
	Continuous load current	I_O		150 mA	120 mA	500 mA
	ON-state current derating	Ta ≥ 25°C		-1.5 mA/°C	-1.2 mA/°C	-5.0 mA/°C
	Junction temperature (T_J)			125°C	125°C	125°C
Dielectric strength		$V_{I/O}$ for 1 minute min.		2500 VAC	2500 VAC	2500 VAC
Temperature	Ambient	Ta with no icing		-40° to +85°C	-40° to +85°C	-40° to +85°C
	Storage	Tstg with no icing		-55° to +125°C	-55° to +100°C	-55° to +125°C

Electrical Characteristics

Parameter		Comments and conditions		G3VM-353D, G3VM-353D(TR)	G3VM-401D, G3VM-401D(TR)	G3VM-61D, G3VM-61D(TR)
Input	LED forward voltage (V_F)	I_F=10 mA	Min.	1.0 V	1.0 V	1.0 V
			Typical	1.15 V	1.15 V	1.15 V
			Max.	1.3 V	1.3 V	1.3 V
	Reverse current	I_R	Max.	10 μA	10 μA	10 μA
	Reverse voltage	V_R	Max.	5 V	5 V	5 V
	Capacitance (C_T)	V = 0; freq. = 1 MHz	Typical	30 pF	30 pF	30 pF
	Keep ON LED current (I_{FT})	At I_{ON}	Typical	1 mA	1 mA	1 mA
			Max.	3 mA	3 mA	3 mA
Output	ON-resistance (R_{ON})	At I_O	Typical	15 Ω (I_{ON}=150 mA)	18 Ω (I_{ON}=120 mA)	1 Ω (I_{ON}=500 mA)
			Max.	25 Ω (I_{ON}=150 mA)	35 Ω (I_{ON}=120 mA)	2 Ω (I_{ON}=500 mA)
	OFF-state leakage current (I_{LEAK})	At V_{OFF}	Max.	1.0 μA	1.0 μA	1.0 μA
	Limit current (I_{LIM})	I_F = 5 mA, V_{DD} = 5 V, t = 5 ms	Min.	—	—	—
			Max.	—	—	—
Transfer characteristics	I/O capacitance	($C_{I/O}$)	Typical	0.8 pF	0.8 pF	0.8 pF
	I/O resistance	(R_{IO})	Min.	1000 MΩ	1000 MΩ	1000 MΩ
	Operate time	(t_{ON})	Max.	1.0 ms	1.0 ms	1.0 ms (I_F = 10 mA)
	Release time	(t_{OFF})	Max.	3.0 ms	1.0 ms	1.0 ms (I_F = 10 mA)

Optimum Operating Conditions

Parameter	Comments and conditions		G3VM-353D, G3VM-353D(TR)	G3VM-401D, G3VM-401D(TR)	G3VM-61D, G3VM-61D(TR)
Output voltage strength	V_{DD}	Max.	280 V	320 V	48 V
Operate LED forward current	I_F	Min.	5 mA	5 mA	5 mA
		Typical	—	7.5 mA	7.5 mA
		Max.	25 mA	25 mA	25 mA
Continuous load current	I_O	Max.	150 mA	100 mA	400 mA
Ambient temperature	T_A		-20° to 65°C	-20° to 65°C	-20° to 65°C

Dimensions

Item	G3VM-353D, G3VM-353D(TR)	G3VM-401D, G3VM-401D(TR)	G3VM-61D, G3VM-61D(TR)
Dimensions	See pages 94, 98	See pages 94, 98	See pages 94, 98

Connections

G3VM-353D, -353D(TR)

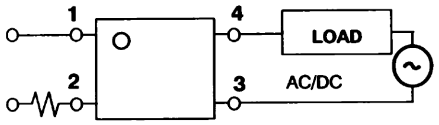

G3VM-353D, -353D(TR), -401D, -401D(TR), -61D, -61D(TR)

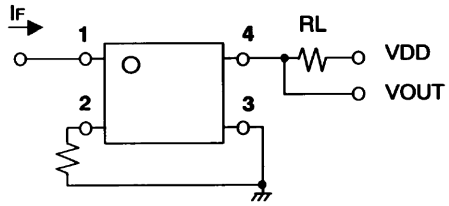

Timing Chart

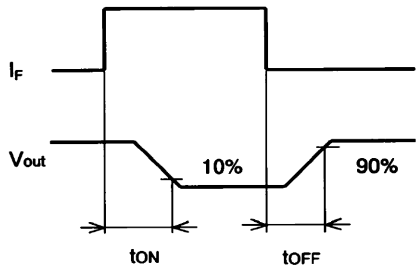

G3VM-61D1(TR), -351E(TR), -353E(TR)

Maximum Rating

Parameter		Comments and conditions		G3VM-61D1, G3VM-61D1(TR)	G3VM-351E, G3VM-351E(TR)	G3VM-353E, G3VM-353E(TR)
Contact form/no. of terminals		—		1 Form A/4 pins	1 Form A/6 pins	1 Form B/6 pins
Input (LED)	LED forward current	I_F	Typical	50 mA	50 mA	50 mA
		I_{FP} (100 μs pulse, 100 pps)	Max.	1 A	1 A	1 A
	Forward current derating	Ta ≥ 25°C		-0.5 mA/°C	-0.5 mA/°C	-0.5 mA/°C
	Reverse voltage	V_R	Max.	5 V	5 V	5 V
	Junction temperature (T_J)			125°C	125°C	125°C
Output (Detector)	Output voltage strength	V_{OFF}		60 V	350 V	350 V
	Continuous load current	I_O		500 mA	120 mA (for A) 120 mA (for B) 240 mA (for C)	150 mA (for A) 150 mA (for B) 300 mA (for C)
	ON-state current derating	Ta ≥ 25°C		-5.0 mA/°C	-1.2 mA/°C (for A)	-1.5 mA/°C (for A)
	Junction temperature (T_J)			125°C	125°C	125°C
Dielectric strength		$V_{I/O}$ for 1 minute min.		2500 VAC	2500 VAC	2500 VAC
Temperature	Ambient	Ta with no icing		-40° to +85°C	-40° to +85°C	-40° to +85°C
	Storage	Tstg with no icing		-55° to +125°C	-55° to +125°C	-55° to +125°C

Electrical Characteristics

Parameter		Comments and conditions		G3VM-61D1, G3VM-61D1(TR)	G3VM-351E, G3VM-351E(TR)	G3VM-353E, G3VM-353E(TR)
Input	LED forward voltage (V_F)	I_F=10 mA	Min.	1.0 V	1.0 V	1.0 V
			Typical	1.15 V	1.15 V	1.15 V
			Max.	1.3 V	1.3 V	1.3 V
	Reverse current	I_R	Max.	10 μA	10 μA	10 μA
	Reverse voltage	V_R	Max.	5 V	5 V	5 V
	Capacitance (C_T)	V = 0; freq. = 1 MHz	Typical	30 pF	30 pF	30 pF
	Keep ON LED current (I_{FT})	At I_{ON}	Typical	1.6 mA	1 mA	1 mA
			Max.	3 mA	3 mA	3 mA
Output	ON-resistance (R_{ON})	I_F=5 mA	Typical	1 Ω (I_{ON}=500 mA)	35 Ω (I_{ON}=120 mA) for connection A	15 Ω (I_{ON}=150 mA) for connection A
			Max.	2 Ω (I_{ON}=500 mA)	50 Ω (I_{ON}=120 mA) for connection A	25 Ω (I_{ON}=150 mA) for connection A
			Typical	—	28 Ω (I_{ON}=120 mA) for connection B	8 Ω (I_{ON}=150 mA) for connection B
			Max.	—	40 Ω (I_{ON}=120 mA) for connection B	14 Ω (I_{ON}=150 mA) for connection B
			Typical	—	14 Ω (I_{ON}=240 mA) for connection C	4 Ω (I_{ON}=300 mA) for connection C
			Max.	—	20 Ω (I_{ON}=240 mA) for connection C	7 Ω (I_{ON}=300 mA) for connection C
	OFF-state leakage current (I_{LEAK})	At V_{OFF}	Max.	1.0 μA	1.0 μA	1.0 μA
Transfer characteristics	I/O capacitance	($C_{I/O}$)	Typical	0.8 pF	0.8 pF	0.8 pF
	I/O resistance	(R_{IO})	Min.	1000 MΩ	1000 MΩ	1000 MΩ
	Operate time	(t_{ON})	Max.	2.0 ms	1.0 ms	1.0 ms
	Release time	(t_{OFF})	Max.	0.5 ms	1.0 ms	3.0 ms

Optimum Operating Conditions

Parameter	Comments and conditions		G3VM-61D1, G3VM-61D1(TR)	G3VM-351E, G3VM-351E(TR)	G3VM-353E, G3VM-353E(TR)
Output voltage strength	V_{DD}	Max.	48 V	280 V	280 V
Operate LED forward current	I_F	Min.	5 mA	5 mA	5 mA
		Typical	7.5 mA	10 mA	—
		Max.	25 mA	25 mA	25 mA
Continuous load current	I_O	Max.	500 mA	100 mA	150 mA
Ambient temperature	T_A		-20° to 65°C	-20° to 65°C	-20° to 65°C

Dimensions

Item	G3VM-61D1, G3VM-61D1(TR)	G3VM-351E, G3VM-351E(TR)	G3VM-353E, G3VM-353E(TR)
Dimensions	See pages 94, 98	See pages 94, 99	See pages 94, 99

Connections

G3VM-61D1, -61D(TR)

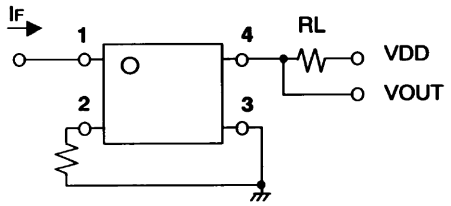

G3VM-351E, -351E(TR), -353E, -353E(TR)

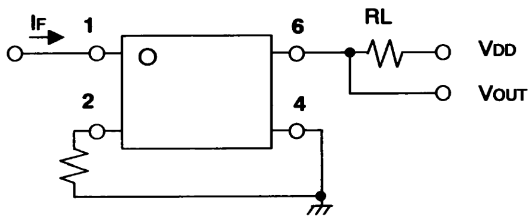

G3VM-351E, -351E(TR), -353E, -353E(TR)

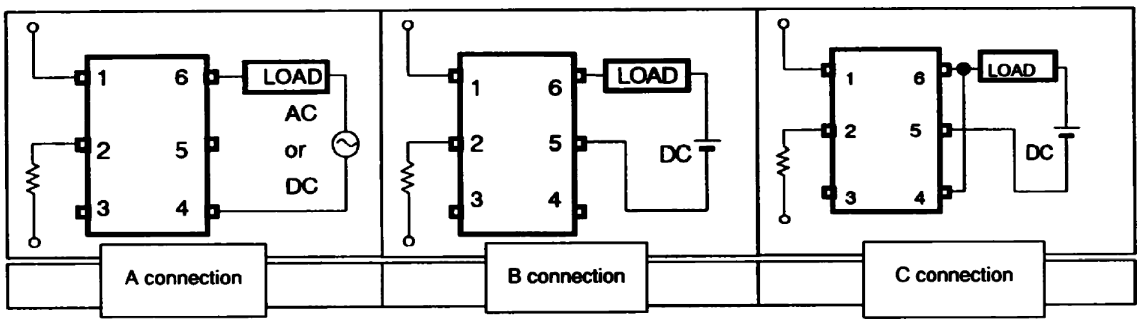

Timing Chart

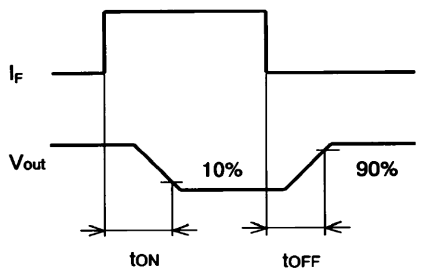

G3VM-3F(TR), -3FL(TR), -401E(TR)

Maximum Rating

Parameter		Comments and conditions		G3VM-3F, G3VM-3F(TR)	G3VM-3FL, G3VM-3FL(TR)	G3VM-401E, G3VM-401E(TR)
Contact form/no. of terminals		—		1 Form A/6 pins	1 Form A/6 pins	1 Form A/6 pins
Input (LED)	LED forward current	I_F	Typical	50 mA	50 mA	50 mA
		I_{FP} (100 μs pulse, 100 pps)	Max.	1 A	1 A	1 A
	Forward current derating	Ta ≥ 25°C		-0.5 mA/°C	-0.5 mA/°C	-0.5 mA/°C
	Reverse voltage	V_R	Max.	5 V	5 V	5 V
	Junction temperature (T_J)			125°C	125°C	125°C
Output (Detector)	Output voltage strength	V_{OFF}		350 V	350 V	400 V
	Continuous load current	I_O		120 mA (for A) 120 mA (for B) 160 mA (for C)	120 mA	120 mA (for A) 120 mA (for B) 240 mA (for C)
	ON-state current derating	Ta ≥ 25°C		-1.2 mA/°C (for A)	-1.2 mA/°C	-1.2 mA/°C (for A)
	Junction temperature (T_J)			125°C	125°C	125°C
Dielectric strength		$V_{I/O}$ for 1 minute min.		2500 VAC	2500 VAC	2500 VAC
Temperature	Ambient	Ta with no icing		-20° to +85°C	-40° to +85°C	-40° to +85°C
	Storage	Tstg with no icing		-55° to +100°C	-55° to +125°C	-55° to +125°C

Electrical Characteristics

Parameter		Comments and conditions		G3VM-3F, G3VM-3F(TR)	G3VM-3FL, G3VM-3FL(TR)	G3VM-401E, G3VM-401E(TR)
Input	LED forward voltage (V_F)	I_F=10 mA	Min.	1.0 V	1.0 V	1.0 V
			Typical	1.15 V	1.15 V	1.15 V
			Max.	1.3 V	1.3 V	1.3 V
	Reverse current	I_R	Max.	10 μA	10 μA	10 μA
	Reverse voltage	V_R	Max.	5 V	5 V	5 V
	Capacitance (C_T)	V = 0; freq. = 1 MHz	Typical	30 pF	30 pF	30 pF
	Keep ON LED current (I_{FT})	At I_O	Typical	—	—	1 mA
			Max.	3 mA	3 mA	3 mA
Output	ON-resistance (R_{ON})	I_F=5 mA	Typical	22 Ω (I_{ON}=120 mA) for connection A	22 Ω (I_{ON}=120 mA) for connection A	17 Ω (I_{ON}=120 mA) for connection A
			Max.	35 Ω (I_{ON}=120 mA) for connection A	35 Ω (I_{ON}=120 mA) for connection A	35 Ω (I_{ON}=120 mA) for connection A
			Typical	16 Ω (I_{ON}=120 mA) for connection B	—	11 Ω (I_{ON}=120 mA) for connection B
			Max.	23 Ω (I_{ON}=120 mA) for connection B	—	20 Ω (I_{ON}=120 mA) for connection B
			Typical	8 Ω (I_{ON}=160 mA) for connection C	—	6 Ω (I_{ON}=240 mA) for connection C
			Max.	12 Ω (I_{ON}=160 mA) for connection C	—	10 Ω (I_{ON}=240 mA) for connection C
	OFF-state leakage current (I_{LEAK})	At V_{OFF}	Max.	1.0 μA	1.0 μA	1.0 μA
	Limit current	(I_{LIM})	Min.	—	150 mA	—
			Max.	—	300 mA	—
Transfer characteristics	I/O capacitance	($C_{I/O}$)	Typical	0.8 pF	0.8 pF	0.8 pF
	I/O resistance	(R_{IO})	Min.	1000 MΩ	1000 MΩ	1000 MΩ
	Operate time	(t_{ON})	Max.	1.0 ms	1.0 ms	1.0 ms
	Release time	(t_{OFF})	Max.	1.0 ms	1.0 ms	1.0 ms

Optimum Operating Conditions

Parameter	Comments and conditions		G3VM-3F, G3VM-3F(TR)	G3VM-3FL, G3VM-3FL(TR)	G3VM-401E, G3VM-401E(TR)
Output voltage strength	V_{DD}	Max.	280 V	280 V	320 V
Operate LED forward current	I_F	Min.	5 mA	5 mA	5 mA
		Typical	7.5 mA	7.5 mA	7.5 mA
		Max.	25 mA	25 mA	25 mA
Continuous load current	I_O	Max.	120 mA	120 mA	120 mA
Ambient temperature	T_A		-20° to 65°C	-20° to 65°C	-20° to 65°C

Dimensions

Item	G3VM-3F, G3VM-3F(TR)	G3VM-3FL, G3VM-3FL(TR)	G3VM-401E, G3VM-401E(TR)
Dimensions	See pages 94, 99	See pages 94, 99	See pages 94, 99

Connections

G3VM-3FL, -3FL(TR)

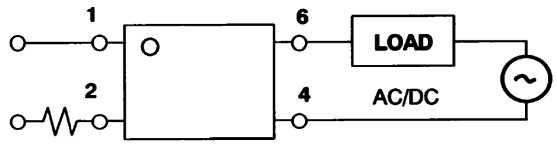

G3VM-3F, -3F(TR), -3FL, -3FL(TR), -401E, -401E(TR)

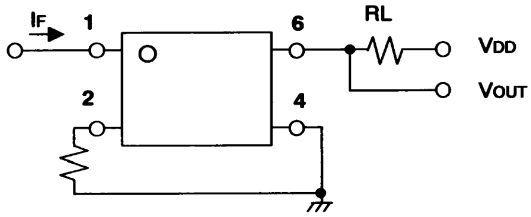

G3VM-3F, -3F(TR), -401E, -401E(TR)

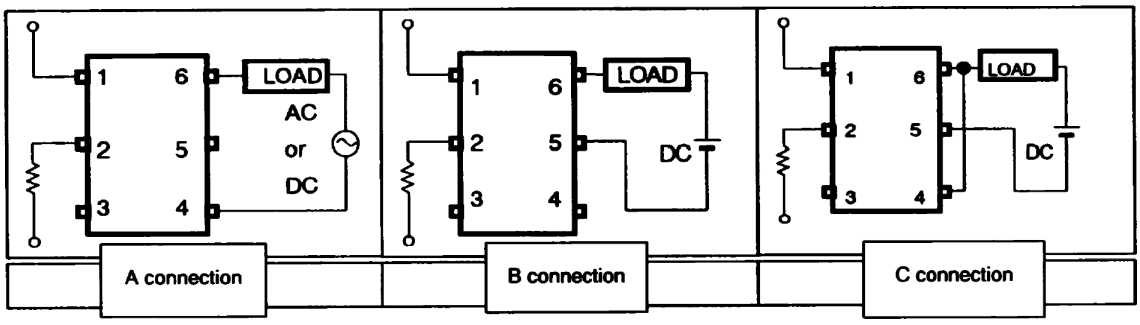

Timing Chart

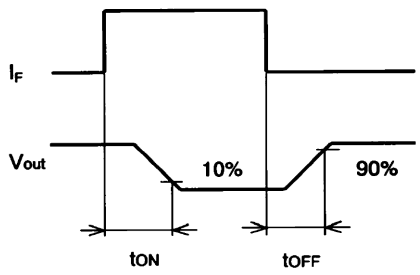

G3VM-401EY(TR), -601EY(TR), G3VM-61E(TR)

Maximum Rating

Parameter		Comments and conditions		G3VM-401EY, G3VM-401EY(TR)	G3VM-601EY, G3VM-601EY(TR)	G3VM-61E, G3VM-61E(TR)
Contact form/no. of terminals		—		1 Form A/6 pins	1 Form A/6 pins	1 Form A/6 pins
Input (LED)	LED forward current	I_F	Typical	50 mA	50 mA	50 mA
		I_{FP} (100 μs pulse, 100 pps)	Max.	1 A	1 A	1 A
	Forward current derating	Ta ≥ 25°C		-0.5 mA/°C	-0.5 mA/°C	-0.5 mA/°C
	Reverse voltage	V_R	Max.	5 V	5 V	5 V
	Junction temperature (T_J)			125°C	125°C	125°C
Output (Detector)	Output voltage strength	V_{OFF}		400 V	600 V	60 V
	Continuous load current	I_O		120 mA (for A) 120 mA (for B) 240 mA (for C)	100 mA (for A) 100 mA (for B) 200 mA (for C)	500 mA (for A) 500 mA (for B) 1000 mA (for C)
	ON-state current derating	Ta ≥ 25°C		-1.2 mA/°C (for A)	-1.0 mA/°C (for A)	-5.0 mA/°C (for A)
	Junction temperature (T_J)			125°C	125°C	125°C
Dielectric strength		$V_{I/O}$ for 1 minute min.		5000 VAC	5000 VAC	2500 VAC
Temperature	Ambient	Ta with no icing		-40° to +85°C	-40° to +85°C	-40° to +85°C
	Storage	Tstg with no icing		-55° to +125°C	-55° to +125°C	-55° to +125°C

Electrical Characteristics

Parameter		Comments and conditions		G3VM-401EY, G3VM-401EY(TR)	G3VM-601EY, G3VM-601EY(TR)	G3VM-61E, G3VM-61E(TR)
Input	LED forward voltage (V_F)	I_F=10 mA	Min.	1.0 V	1.0 V	1.0 V
			Typical	1.15 V	1.15 V	1.15 V
			Max.	1.3 V	1.3 V	1.3 V
	Reverse current	I_R	Max.	10 μA	10 μA	10 μA
	Reverse voltage	V_R	Max.	5 V	5 V	5 V
	Capacitance (C_T)	V = 0; freq. = 1 MHz	Typical	30 pF	30 pF	30 pF
	Keep ON LED current (I_{FT})	At I_O	Typical	—	1.6 mA	—
			Max.	3 mA	5 mA	3 mA
Output	ON-resistance (R_{ON})	I_F=5 mA	Typical	17 Ω (I_{ON}=120 mA) for connection A	22 Ω (I_{ON}=100 mA) for connection A	1 Ω (I_{ON}=500 mA) for connection A
			Max.	35 Ω (I_{ON}=120 mA) for connection A	35 Ω (I_{ON}=100 mA) for connection A	2 Ω (I_{ON}=500 mA) for connection A
			Typical	11 Ω (I_{ON}=120 mA) for connection B	17 Ω (I_{ON}=100 mA) for connection B	0.5 Ω (I_{ON}=500 mA) for connection B
			Max.	20 Ω (I_{ON}=120 mA) for connection B	27 Ω (I_{ON}=100 mA) for connection B	1 Ω (I_{ON}=500 mA) for connection B
			Typical	6 Ω (I_{ON}=240 mA) for connection C	8.5 Ω (I_{ON}=200 mA) for connection C	0.3 Ω (I_{ON}=1000 mA) for connection C
			Max.	10 Ω (I_{ON}=240 mA) for connection C	13.5 Ω (I_{ON}=200 mA) for connection C	—
	OFF-state leakage current (I_{LEAK})	At V_{OFF}	Max.	1.0 μA	1.0 μA	1.0 μA
Transfer characteristics	I/O capacitance	($C_{I/O}$)	Typical	0.8 pF	0.8 pF	0.8 pF
	I/O resistance	(R_{IO})	Min.	1000 MΩ	1000 MΩ	1000 MΩ
	Operate time	(t_{ON})	Max.	1.0 ms	1.5 ms	1.0 ms
	Release time	(t_{OFF})	Max.	1.0 ms	1.0 ms	1.0 ms

Optimum Operating Conditions

Parameter	Comments and conditions		G3VM-401EY, G3VM-401EY(TR)	G3VM-601EY, G3VM-601EY(TR)	G3VM-61E, G3VM-61E(TR)
Output voltage strength	V_{DD}	Max.	320 V	480 V	48 V
Operate LED forward current	I_F	Min.	5 mA	5 mA	5 mA
		Typical	7.5 mA	—	7.5 mA
		Max.	25 mA	25 mA	25 mA
Continuous load current	I_O	Max.	120 mA	100 mA	400 mA
Ambient temperature	T_A		-20° to 65°C	-20° to 65°C	-20° to 65°C

Dimensions

Item	G3VM-401EY, G3VM-401EY(TR)	G3VM-601EY, G3VM-601EY(TR)	G3VM-61E, G3VM-61E(TR)
Dimensions	See pages 94, 99	See pages 94, 99	See pages 94, 99

Connections

G3VM-401EY, -401EY(TR), -601EY, -601EY(TR), -61E, -61E(TR)

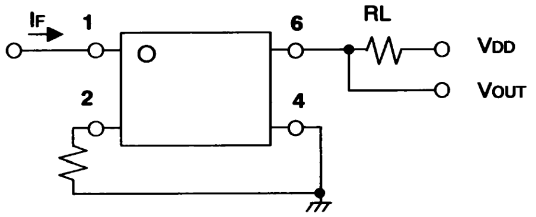

G3VM-401EY, -401EY(TR), -601EY, -601EY(TR), -61E, -61E(TR)

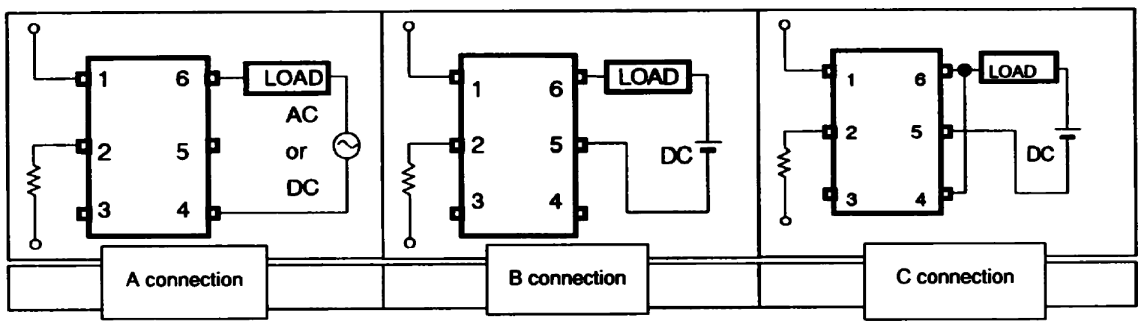

Timing Chart

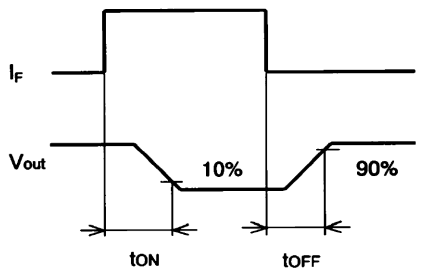

G3VM-61E1(TR), -VF(TR)

Maximum Rating

Parameter		Comments and conditions		G3VM-61E1, G3VM-61E1(TR)	G3VM-VF, G3VM-VF(TR)
Contact form/no. of terminals		—		1 Form A/6 pins	1 Form A/6 pins
Input (LED)	LED forward current	I_F	Typical	50 mA	50 mA
		I_{FP} (100 μs pulse, 100 pps)	Max.	1 A	1 A
	Forward current derating	Ta ≥ 25°C		-0.5 mA/°C	-0.5 mA/°C
	Reverse voltage	V_R	Max.	5 V	5 V
	Junction temperature (T_J)			125°C	125°C
Output (Detector)	Output voltage strength	V_{OFF}		60 V	60 V
	Continuous load current	I_O		500 mA (for A) 500 mA (for B) 1000 mA (for C)	300 mA (for A) 450 mA (for B) 600 mA (for C)
	ON-state current derating	Ta ≥ 25°C		-5.0 mA/°C (for A)	-3.0 mA/°C (for A)
	Junction temperature (T_J)			125°C	125°C
Dielectric strength		$V_{I/O}$ for 1 minute min.		2500 VAC	2500 VAC
Temperature	Ambient	Ta with no icing		-40° to +85°C	-20° to +85°C
	Storage	Tstg with no icing		-55° to +125°C	-55° to +100°C

Electrical Characteristics

Parameter		Comments and conditions		G3VM-61E1, G3VM-61E1(TR)	G3VM-VF, G3VM-VF(TR)
Input	LED forward voltage (V_F)	I_F=10 mA	Min.	1.0 V	1.0 V
			Typical	1.15 V	1.15 V
			Max.	1.3 V	1.3 V
	Reverse current	I_R	Max.	10 μA	10 μA
	Reverse voltage	V_R	Max.	5 V	5 V
	Capacitance (C_T)	V = 0; freq. = 1 MHz	Typical	30 pF	30 pF
	Keep ON LED current (I_{FT})	At I_O	Typical	1.6 mA	1 mA
			Max.	3 mA	5 mA
Output	ON-resistance (R_{ON})	I_F=5 mA	Typical	1 Ω (I_{ON}=500 mA) for connection A	1.4 Ω (I_{ON}=300 mA) for connection A
			Max.	2 Ω (I_{ON}=500 mA) for connection A	2 Ω (I_{ON}=300 mA) for connection A
			Typical	0.5 Ω (I_{ON}=500 mA) for connection B	0.7 Ω (I_{ON}=450 mA) for connection B
			Max.	1 Ω (I_{ON}=500 mA) for connection B	1 Ω (I_{ON}=450 mA) for connection B
			Typical	0.25 Ω (I_{ON}=1000 mA) for connection C	0.35 Ω (I_{ON}=600 mA) for connection C
			Max.	—	0.5 Ω (I_{ON}=600 mA) for connection C
	OFF-state leakage current (I_{LEAK})	At V_{OFF}	Max.	1.0 μA	1.0 μA
Transfer characteristics	I/O capacitance	($C_{I/O}$)	Typical	0.8 pF	0.8 pF
	I/O resistance	(R_{IO})	Min.	1000 MΩ	1000 MΩ
	Operate time	(t_{ON})	Max.	2.0 ms	1.0 ms
	Release time	(t_{OFF})	Max.	0.5 ms	1.0 ms

Optimum Operating Conditions

Parameter	Comments and conditions		G3VM-61E1, G3VM-61E1(TR)	G3VM-VF, G3VM-VF(TR)
Output voltage strength	V_{DD}	Max.	48 V	48 V
Operate LED forward current	I_F	Min.	5 mA	7.5 mA
		Typical	7.5 mA	15 mA
		Max.	25 mA	25 mA
Continuous load current	I_O	Max.	500 mA	300 mA
Ambient temperature	T_A		-20° to 65°C	-20° to 80°C

Dimensions

Item	G3VM-61E1, G3VM-61E1(TR)	G3VM-VF, G3VM-VF(TR)
Dimensions	See pages 94, 99	See pages 94, 99

Connections

G3VM-61E1, -61E1(TR), -VF, -VF(TR)

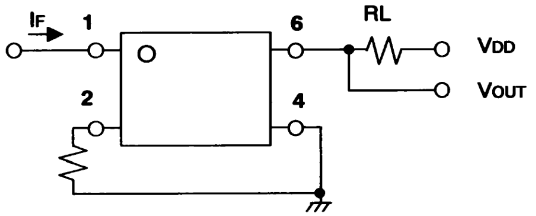

G3VM-61E1, -61E1(TR), -VF, -VF(TR)

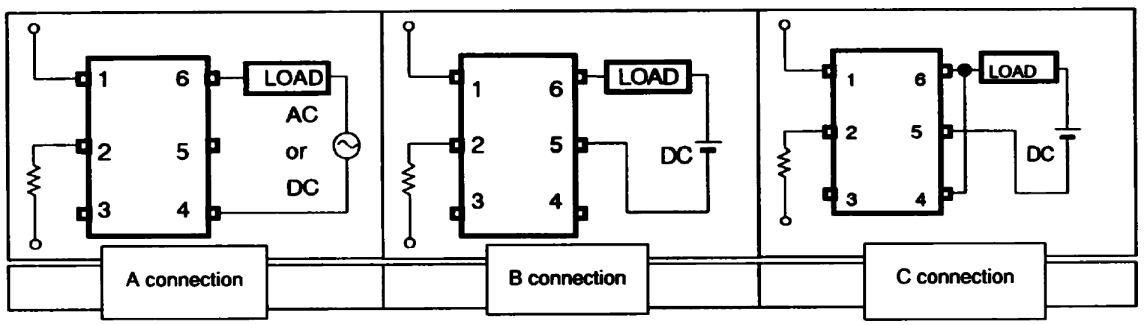

Timing Chart

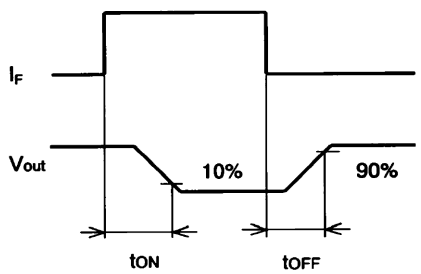

G3VM-22FO(TR)

Maximum Rating

Parameter		Comments and conditions		G3VM-22FO, G3VM-22FO(TR)
Contact form/no. of terminals		—		1 Form A/8 pins
Input (LED)	LED forward current	I_F	Typical	50 mA
		I_{FP} (100 μs pulse, 100 pps)	Max.	1 A
	Forward current derating	Ta ≥ 25°C		-0.5 mA/°C
	Reverse voltage	V_R	Max.	6 V
	Junction temperature (T_J)			125°C
Output (Detector)	Output voltage strength	V_{OFF}		20 V
	Continuous load current	I_O		150 mA
	ON-state current derating	Ta ≥ 25°C		-1.5 mA/°C
	Junction temperature (T_J)			125°C
Dielectric strength		$V_{I/O}$ for 1 minute min.		2500 VAC
Temperature	Ambient	Ta with no icing		-40° to +85°C
	Storage	Tstg with no icing		-55° to +125°C

Electrical Characteristics

Parameter		Comments and conditions		G3VM-22FO, G3VM-22FO(TR)
Input	LED forward voltage (V_F)	I_F=10 mA	Min.	1.0 V
			Typical	1.15 V
			Max.	1.3 V
	Reverse current	I_R	Max.	10 μA
	Reverse voltage	V_R	Max.	6 V
	Capacitance (C_T)	V = 0; freq. = 1 MHz	Typical	15 pF
	Keep ON LED current (I_{FT})	At I_O	Typical	1.5 mA
			Max.	5 mA
Output	ON-resistance (R_{ON})	I_F=5 mA	Typical	2 Ω (I_{ON}=150 mA)
			Max.	4 Ω (I_{ON}=150 mA)
			Typical	—
			Max.	—
			Typical	—
			Max.	—
	OFF-state leakage current (I_{LEAK})	At V_{OFF}	Max.	1.0 μA
Transfer characteristics	I/O capacitance	($C_{I/O}$)	Typical	0.8 pF
	I/O resistance	(R_{IO})	Min.	1000 MΩ
	Operate time	(t_{ON})	Max.	1.0 ms
	Release time	(t_{OFF})	Max.	1.0 ms

Optimum Operating Conditions

Parameter	Comments and conditions		G3VM-22FO, G3VM-22FO(TR)
Output voltage strength	V_{DD}	Max.	20 V
Operate LED forward current	I_F	Min.	5 mA
		Typical	— mA
		Max.	30 mA
Continuous load current	I_O	Max.	150 mA
Ambient temperature	T_A		-20° to 65°C

Dimensions

Item	G3VM-22FO, G3VM-22FO(TR)
Dimensions	See pages 95, 99

Connections

G3VM-22FO, -22FO(TR)

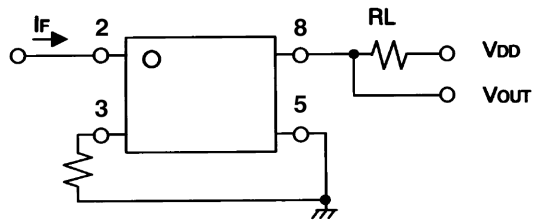

G3VM-22FO, -22FO(TR)

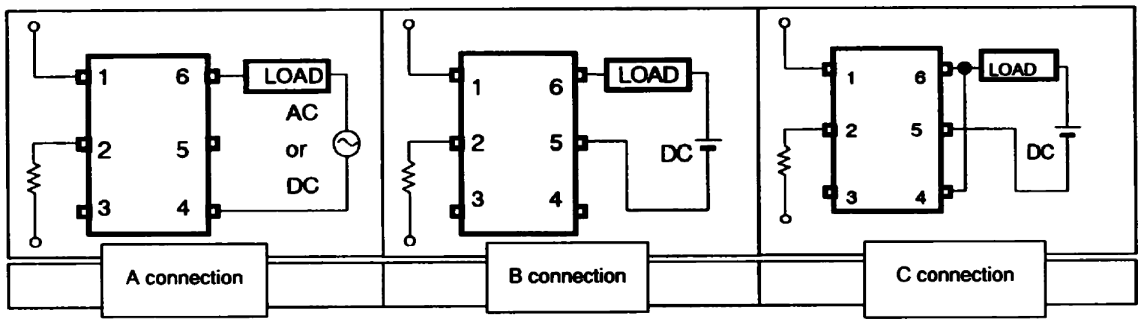

Timing Chart

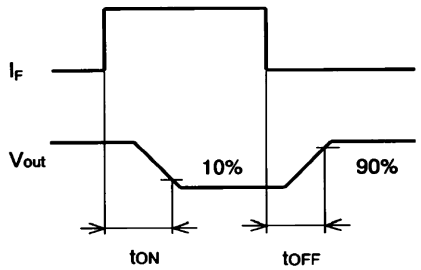

G3VM-61FP(TR), -61FR(TR), -355FR(TR)

Maximum Rating

Parameter		Comments and conditions		G3VM-61FP, G3VM-61FP(TR)	G3VM-61FR, G3VM-61FR(TR)	G3VM-355FR, G3VM-355FR(TR)
Contact form/no. of terminals		—		1 Form A/8 pins	1 Form A/8 pins	1FormA+1FormB/ 8 pins
Input (LED)	LED forward current	I_F	Typical	50 mA	50 mA	50 mA
		I_{FP} (100 μs pulse, 100 pps)	Max.	1 A	1 A	1 A
	Forward current derating	Ta ≥ 25°C		-0.5 mA/°C	-0.5 mA/°C	-0.5 mA/°C
	Reverse voltage	V_R	Max.	6 V	6 V	5 V
	Junction temperature (T_J)			125°C	125°C	125°C
Output (Detector)	Output voltage strength	V_{OFF}		60 V	60 V	350 V
	Continuous load current	I_O		500 mA	2000 mA	120 mA
	ON-state current derating	Ta ≥ 25°C		-5.0 mA/°C	-20 mA/°C	-1.2 mA/°C
	Junction temperature (T_J)			125°C	125°C	125°C
Dielectric strength		$V_{I/O}$ for 1 minute min.		2500 VAC	1500 VAC	2500 VAC
Temperature	Ambient	Ta with no icing		-40° to +85°C	-20° to +85°C	-40° to +85°C
	Storage	Tstg with no icing		-55° to +125°C	-55° to +125°C	-55° to +125°C

Electrical Characteristics

Parameter		Comments and conditions		G3VM-61FP, G3VM-61FP(TR)	G3VM-61FR, G3VM-61FR(TR)	G3VM-355FR, G3VM-355FR(TR)
Input	LED forward voltage (V_F)	I_F=10 mA	Min.	1.0 V	1.0 V	1.0 V
			Typical	1.2 V	1.2 V	1.15 V
			Max.	1.4 V	1.4 V	1.3 V
	Reverse current	I_R	Max.	10 μA	10 μA	10 μA
	Reverse voltage	V_R	Max.	6 V	6 V	5 V
	Capacitance (C_T)	V = 0; freq. = 1 MHz	Typical	15 pF	15 pF	30 pF
	Keep ON LED current (I_{FT})	At I_O	Typical	—	—	1 mA
			Max.	5 mA	5 mA	3 mA
Output	ON-resistance (R_{ON})	I_F=5 mA (1a)	Typical	0.3 Ω (I_{ON}=500 mA)	—	15 Ω (I_{ON}=120 mA)
			Max.	0.6 Ω (I_{ON}=500 mA)	0.12 Ω (I_{ON}=1000 mA)	25 Ω (I_{ON}=120 mA)
		I_F=0 mA (1b)	Typical	—	—	15 Ω (I_{ON}=120 mA)
			Max.	—	—	25 Ω (I_{ON}=120 mA)
	OFF-state leakage current (I_{LEAK})	At V_{OFF}	Max.	1.0 μA	4.0 μA	1.0 μA
	Capacitance	C_{OFF}	Typical	200 pF	—	—
			Max.	500 pF	—	—
Transfer characteristics	I/O capacitance	($C_{I/O}$)	Typical	0.8 pF	0.8 pF	0.8 pF
	I/O resistance	(R_{IO})	Min.	1000 MΩ	1000 MΩ	1000 MΩ
	Operate time	(t_{ON})	Max.	2.0 ms	5.0 ms	1.0 ms
	Release time	(t_{OFF})	Max.	0.5 ms	3.5 ms	3.0 ms

Optimum Operating Conditions

Parameter	Comments and conditions		G3VM-61FP, G3VM-61FP(TR)	G3VM-61FR, G3VM-61FR(TR)	G3VM-355FR, G3VM-355FR(TR)
Output voltage strength	V_{DD}	Max.	48 V	48 V	280 V
Operate LED forward current	I_F	Min.	10 mA	10 mA	5 mA
		Typical	— mA	—	—
		Max.	30 mA	30 mA	25 mA
Continuous load current	I_O	Max.	500 mA	2000 mA	120 mA
Ambient temperature	T_A		-25° to 50°C	-20° to 50°C	-20° to 65°C

Dimensions

Item	G3VM-61FP, G3VM-61FP(TR)	G3VM-61FR, G3VM-61FR(TR)	G3VM-355FR, G3VM-355FR(TR)
Dimensions	See pages 95, 99	See pages 95, 99	See pages 95, 99

Connections

G3VM-61FP, -61FP(TR)

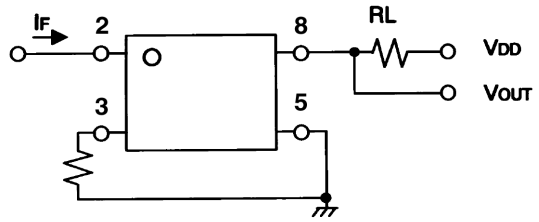

G3VM-61FR, -61FR(TR)

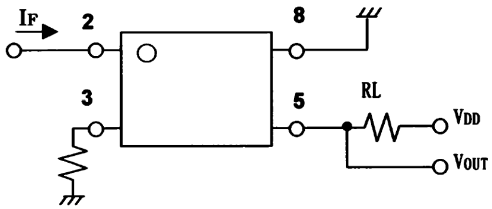

G3VM-355FR, -355FR(TR)

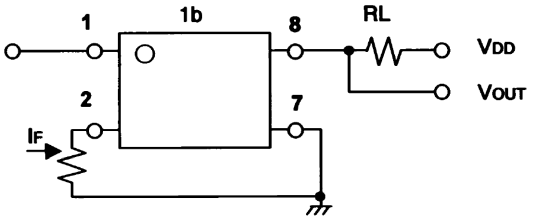

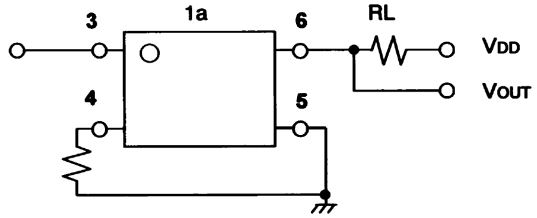

Timing Chart

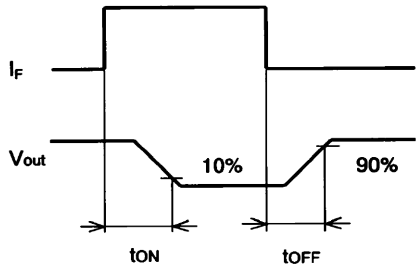

G3VM-352F(TR), -402F(TR), -62F1(TR)

Maximum Rating

Parameter		Comments and conditions		G3VM-352F, G3VM-352F(TR)	G3VM-402F, G3VM-402F(TR)	G3VM-62F1, G3VM-62F1(TR)
Contact form/no. of terminals		—		2 Form A/8 pins	2 Form A/8 pins	2 Form A/8 pins
Input (LED)	LED forward current	I_F	Typical	50 mA	50 mA	50 mA
		I_{FP} (100 μs pulse, 100 pps)	Max.	1 A	1 A	1 A
	Forward current derating	Ta ≥ 25°C		-0.5 mA/°C	-0.5 mA/°C	-0.5 mA/°C
	Reverse voltage	V_R	Max.	5 V	5 V	5 V
	Junction temperature (T_J)			125°C	125°C	125°C
Output (Detector)	Output voltage strength	V_{OFF}		350 V	400 V	60 V
	Continuous load current	I_O		120 mA	120 mA	500 mA
	ON-state current derating	Ta ≥ 25°C		-1.2 mA/°C	-1.2 mA/°C	-5.0 mA/°C
	Junction temperature (T_J)			125°C	125°C	125°C
Dielectric strength		$V_{I/O}$ for 1 minute min.		2500 VAC	2500 VAC	2500 VAC
Temperature	Ambient	Ta with no icing		-40° to +85°C	-40° to +85°C	-40° to +85°C
	Storage	Tstg with no icing		-55° to +125°C	-55° to +125°C	-55° to +125°C

Electrical Characteristics

Parameter		Comments and conditions		G3VM-352F, G3VM-352F(TR)	G3VM-402F, G3VM-402F(TR)	G3VM-62F1, G3VM-62F1(TR)
Input	LED forward voltage (V_F)	I_F=10 mA	Min.	1.0 V	1.0 V	1.0 V
			Typical	1.15 V	1.15 V	1.15 V
			Max.	1.3 V	1.3 V	1.3 V
	Reverse current	I_R	Max.	10 μA	10 μA	10 μA
	Reverse voltage	V_R	Max.	5 V	5 V	5 V
	Capacitance (C_T)	V = 0; freq. = 1 MHz	Typical	30 pF	30 pF	30 pF
	Keep ON LED current (I_{FT})	At I_O	Typical	1	1 mA	1.6 mA
			Max.	3 mA	3 mA	3 mA
Output	ON-resistance (R_{ON})	I_F=5 mA	Typical	35 Ω (25 Ω, t < 1s)	18 Ω (I_{ON}=120 mA)	1.0 Ω (I_{ON}=500 mA)
			Max.	50 Ω (35 Ω, t < 1s)	35 Ω (I_{ON}=120 mA)	2.0 Ω (I_{ON}=500 mA)
	OFF-state leakage current (I_{LEAK})	At V_{OFF}	Max.	1.0 μA	1.0 μA	1.0 μA
	Capacitance	COFF	Typical	—	—	—
			Max.	—	—	—
Transfer characteristics	I/O capacitance	($C_{I/O}$)	Typical	0.8 pF	0.8 pF	0.8 pF
	I/O resistance	(R_{IO})	Min.	1000 MΩ	1000 MΩ	1000 MΩ
	Operate time	(t_{ON})	Max.	1.0 ms	1.0 ms	2.0 ms
	Release time	(t_{OFF})	Max.	1.0 ms	1.0 ms	0.5 ms

Optimum Operating Conditions

Parameter	Comments and conditions		G3VM-352F, G3VM-352F(TR)	G3VM-402F, G3VM-402F(TR)	G3VM-62F1, G3VM-62F1(TR)
Output voltage strength	V_{DD}	Max.	280 V	320 V	48 V
Operate LED forward current	I_F	Min.	5 mA	5 mA	5 mA
		Typical	7.5 mA	7.5	7.5 mA
		Max.	25 mA	25 mA	25 mA
Continuous load current	I_O	Max.	100 mA	100 mA	500 mA
Ambient temperature	T_A		-20° to 65°C	-20° to 65°C	-20° to 65°C

Dimensions

Item	G3VM-352F, G3VM-352F(TR)	G3VM-402F, G3VM-402F(TR)	G3VM-62F1, G3VM-62F1(TR)
Dimensions	See pages 95, 99	See pages 95, 99	See pages 95,99

Connections

G3VM-352FR, -352FR(TR), -402F, -402F(TR), -62F1, -62F1(TR)

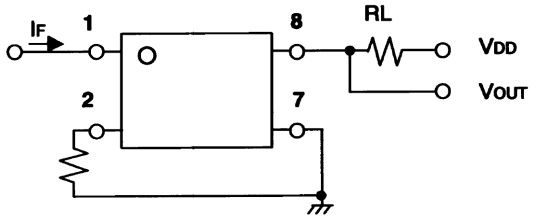

Timing Chart

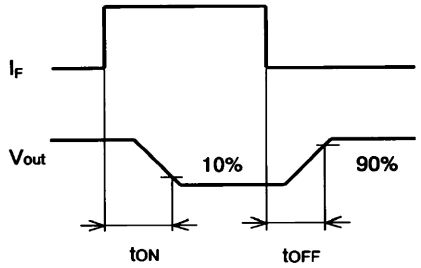

G3VM-WF(TR), -WFL(TR), -354F(TR)

Maximum Rating

Parameter		Comments and conditions		G3VM-WF, G3VM-WF(TR)	G3VM-WFL, G3VM-WFL(TR)	G3VM-354F, G3VM-354F(TR)
Contact form/no. of terminals		—		2 Form A/8 pins	2 Form A/8 pins	2 Form B/8 pins
Input (LED)	LED forward current	I_F	Typical	50 mA	50 mA	50 mA
		I_{FP} (100 μs pulse, 100 pps)	Max.	1 A	1 A	1 A
	Forward current derating	Ta ≥ 25°C		-0.5 mA/°C	-0.5 mA/°C	-0.5 mA/°C
	Reverse voltage	V_R	Max.	5 V	6 V	5 V
	Junction temperature (T_J)			125°C	125°C	125°C
Output (Detector)	Output voltage strength	V_{OFF}		350 V	350 V	350 V
	Continuous load current	I_O		120 mA	120 mA	150 mA
	ON-state current derating	Ta ≥ 25°C		-1.2 mA/°C	-1.2 mA/°C	-1.5 mA/°C
	Junction temperature (T_J)			125°C	125°C	125°C
Dielectric strength		$V_{I/O}$ for 1 minute min.		2500 VAC	2500 VAC	2500 VAC
Temperature	Ambient	Ta with no icing		-20° to +85°C	-40° to +85°C	-40° to +85°C
	Storage	Tstg with no icing		-55° to +100°C	-55° to +125°C	-55° to +125°C

Electrical Characteristics

Parameter		Comments and conditions		G3VM-WF, G3VM-WF(TR)	G3VM-WFL, G3VM-WFL(TR)	G3VM-354F, G3VM-354F(TR)
Input	LED forward voltage (V_F)	I_F=10 mA	Min.	1.0 V	1.0 V	1.0 V
			Typical	1.15 V	1.15 V	1.15 V
			Max.	1.3 V	1.3 V	1.3 V
	Reverse current	I_R	Max.	10 μA	10 μA	10 μA
	Reverse voltage	V_R	Max.	5 V	6 V	5 V
	Capacitance (C_T)	V = 0; freq. = 1 MHz	Typical	30 pF	30 pF	30 pF
	Keep ON LED current (I_{FT})	At I_O	Typical	2 mA	1 mA	1 mA
			Max.	3 mA	3 mA	3 mA
Output	ON-resistance (R_{ON})	I_F=5 mA	Typical	22 Ω (I_{ON}=120 mA)	22 Ω (I_{ON}=120 mA)	15 Ω (I_{ON}=300 mA)
			Max.	35 Ω (I_{ON}=120 mA)	35 Ω (I_{ON}=120 mA)	25 Ω (I_{ON}=300 mA)
	OFF-state leakage current (I_{LEAK})	At V_{OFF}	Max.	1.0 μA	1.0 μA	1.0 μA
	Limit current	I_{LIM}	Min.	—	150 mA	—
			Max.	—	300 mA	—
Transfer characteristics	I/O capacitance	($C_{I/O}$)	Typical	0.8 pF	0.8 pF	0.8 pF
	I/O resistance	(R_{IO})	Min.	1000 MΩ	1000 MΩ	1000 MΩ
	Operate time	(t_{ON})	Max.	1.0 ms	1.0 ms	1.0 ms
	Release time	(t_{OFF})	Max.	1.0 ms	1.0 ms	3.0 ms

Optimum Operating Conditions

Parameter	Comments and conditions		G3VM-WF, G3VM-WF(TR)	G3VM-WFL, G3VM-WFL(TR)	G3VM-354F, G3VM-354F(TR)
Output voltage strength	V_{DD}	Max.	280 V	280 V	280 V
Operate LED forward current	I_F	Min.	5 mA	5 mA	5 mA
		Typical	7.5 mA	7.5 mA	—
		Max.	25 mA	25 mA	25 mA
Continuous load current	I_O	Max.	100 mA	100 mA	150 mA
Ambient temperature	T_A		-20° to 65°C	-20° to 65°C	-20° to 65°C

Dimensions

Item	G3VM-WF, G3VM-WF(TR)	G3VM-WFL, G3VM-WFL(TR)	G3VM-354F, G3VM-354F(TR)
Dimensions	See pages 95, 99	See pages 95, 99	See pages 95, 99

Connections

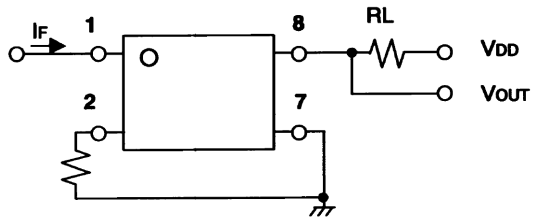

G3VM-WF, -WF(TR), -WFL, -WFL(TR), -354F, -354F(TR)

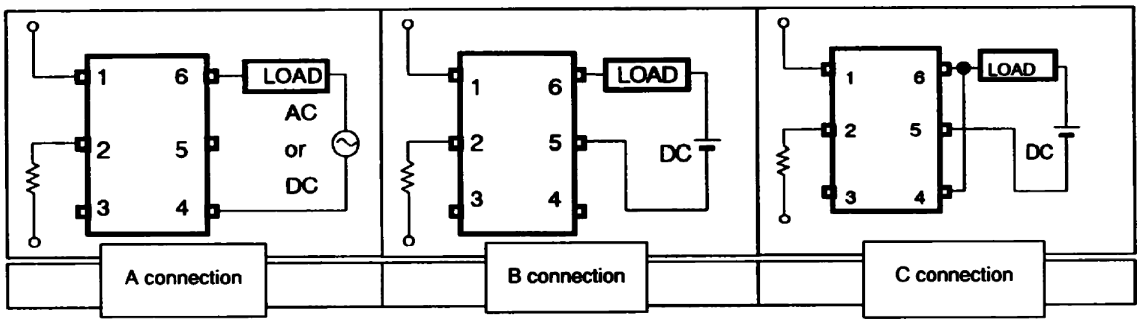

Timing Chart

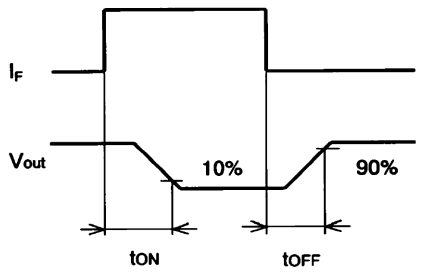

G3VM-21GR(TR), -21GR1(TR), -351G(TR)

Maximum Rating

Parameter		Comments and conditions		G3VM-21GR, G3VM-21GR(TR)	G3VM-21GR1, G3VM-21GR1(TR)	G3VM-351G, G3VM-351G(TR)
Contact form/no. of terminals		—		1 Form A/4 pins	1 Form A/4 pins	1 Form A/4 pins
Input (LED)	LED forward current	I_F	Typical	50 mA	50 mA	50 mA
		I_{FP} (100 μs pulse, 100 pps)	Max.	1 A	1 A	1 A
	Forward current derating	Ta ≥ 25°C		-0.5 mA/°C	-0.5 mA/°C	-0.5 mA/°C
	Reverse voltage	V_R	Max.	5 V	5 V	5 V
	Junction temperature (T_J)			125°C	125°C	125°C
Output (Detector)	Output voltage strength	V_{OFF}		20 V	20 V	350 V
	Continuous load current	I_O		160 mA	300 mA	110 mA
	ON-state current derating	Ta ≥ 25°C		-1.6 mA/°C	-3.0 mA/°C	-1.1 mA/°C
	Junction temperature (T_J)			125°C	125°C	125°C
Dielectric strength		$V_{I/O}$ for 1 minute min.		1500 VAC	1500 VAC	1500 VAC
Temperature	Ambient	Ta with no icing		-20° to +85°C	-20° to +85°C	-40° to +85°C
	Storage	Tstg with no icing		-55° to +125°C	-55° to +125°C	-55° to +100°C

Electrical Characteristics

Parameter		Comments and conditions		G3VM-21GR, G3VM-21GR(TR)	G3VM-21GR1, G3VM-21GR1(TR)	G3VM-351G, G3VM-351G(TR)
Input	LED forward voltage (V_F)	I_F=10 mA	Min.	1.0 V	1.0 V	1.0 V
			Typical	1.15 V	1.15 V	1.15 V
			Max.	1.3 V	1.3 V	1.3 V
	Reverse current	I_R	Max.	10 μA	10 μA	10 μA
	Reverse voltage	V_R	Max.	5 V	5 V	5 V
	Capacitance (C_T)	V = 0; freq. = 1 MHz	Typical	15 pF	15 pF	30 pF
	Keep ON LED current (I_{FT})	At I_O	Typical	—	—	1 mA (I_O = 100 mA)
			Max.	4 mA (I_O = 100 mA)	4 mA (I_O = 100 mA)	3 mA (I_O = 100 mA)
Output	ON-resistance (R_{ON})	At I_{ON} I_F=5 mA	Typical	5 Ω	1 Ω (I_{ON} = 300 mA)	35 Ω (25 Ω, t< 1s)
			Max.	8 Ω	1.5 Ω (I_{ON} = 300 mA)	50 Ω (35 Ω, t< 1s)
	OFF-state leakage current (I_{LEAK})	V_{OFF} = 350 V	Max.	1.0 μA	1.0 μA	1.0 μA
	OFF capacitance	C_{OFF}	Min.	1.0 pF	5.0 pF	—
			Max.	2.0 pF	12.0 pF	—
Transfer characteristics	I/O capacitance	($C_{I/O}$)	Typical	0.8 pF	0.8 pF	0.8 pF
	I/O resistance	(R_{IO})	Min.	1000 MΩ	1000 MΩ	1000 MΩ
	Operate time	(t_{ON})	Max.	0.5 ms	0.5 ms	1.0 ms
	Release time	(t_{OFF})	Max.	0.5 ms	0.5 ms	1.0 ms

Optimum Operating Conditions

Parameter	Comments and conditions		G3VM-21GR, G3VM-21GR(TR)	G3VM-21GR1, G3VM-21GR1(TR)	G3VM-351G, G3VM-351G(TR)
Output voltage strength	V_{DD}	Max.	20 V	20 V	280 V
Operate LED forward current	I_F	Min.	7 mA	7 mA	5 mA
		Typical	—	—	7.5 mA
		Max.	30 mA	30 mA	25 mA
Continuous load current	I_O	Max.	160 mA	300 mA	100 mA
Ambient temperature	T_A		-25° to 60°C	-25° to 60°C	-20° to 65°C

Dimensions

Item	G3VM-21GR, G3VM-21GR(TR)	G3VM-21GR1, G3VM-21GR1(TR)	G3VM-351G, G3VM-351G(TR)
Dimensions	See pages 96, 100	See pages 96, 100	See pages 96, 100

Connections

G3VM-21GR, -21GR(TR), -21GR1, -21GR1(TR), -351G, -351G(TR)

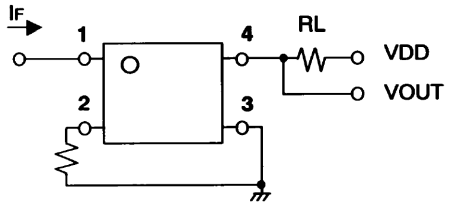

Timing Chart

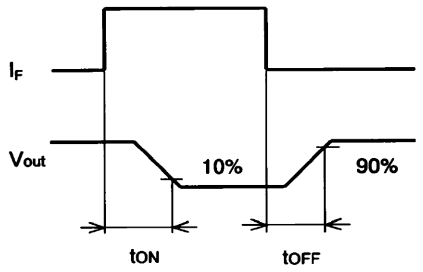

G3VM-353G(TR), -401G(TR), -41GR3(TR)

Maximum Rating

Parameter		Comments and conditions		G3VM-353G, G3VM-353G(TR)	G3VM-401G, G3VM-401G(TR)	G3VM-41GR3, G3VM-41GR3(TR)
Contact form/no. of terminals		—		1 Form B/4 pins	1 Form A/4 pins	1 Form A/4 pins
Input (LED)	LED forward current	I_F	Typical	50 mA	50 mA	50 mA
		I_{FP} (100 μs pulse, 100 pps)	Max.	1 A	1 A	1 A
	Forward current derating	Ta ≥ 25°C		-0.5 mA/°C	-0.5 mA/°C	-0.5 mA/°C
	Reverse voltage	V_R	Max.	5 V	5 V	5 V
	Junction temperature (T_J)			125°C	125°C	125°C
Output (Detector)	Output voltage strength	V_{OFF}		350 V	400 V	40 V
	Continuous load current	I_O		120 mA	120 mA	80 mA
	ON-state current derating	Ta ≥ 25°C		-1.2 mA/°C	-1.2 mA/°C	-0.8 mA/°C
	Junction temperature (T_J)			125°C	125°C	125°C
Dielectric strength		$V_{I/O}$ for 1 minute min.		1500 VAC	1500 VAC	1500 VAC
Temperature	Ambient	Ta with no icing		-40° to +85°C	-40° to +85°C	-40° to +85°C
	Storage	Tstg with no icing		-55° to +125°C	-55° to +125°C	-55° to +125°C

Electrical Characteristics

Parameter		Comments and conditions		G3VM-353G, G3VM-353G(TR)	G3VM-401G, G3VM-401G(TR)	G3VM-41GR3, G3VM-41GR3(TR)
Input	LED forward voltage (V_F)	I_F=10 mA	Min.	1.0 V	1.0 V	1.0 V
			Typical	1.15 V	1.15 V	1.15 V
			Max.	1.3 V	1.3 V	1.3 V
	Reverse current	I_R	Max.	10 μA	10 μA	10 μA
	Reverse voltage	V_R	Max.	5 V	5 V	5 V
	Capacitance (C_T)	V = 0; freq. = 1 MHz	Typical	30 pF	30 pF	15 pF
	Keep ON LED current (I_{FT})	At I_{ON}	Typical	1 mA	1 mA	—
			Max.	3 mA	3 mA	4 mA
Output	ON-resistance (R_{ON})	At I_O	Typical	15 Ω (I_{ON}=120 mA)	17 Ω (I_{ON}=120 mA)	25 Ω (I_{ON}=80 mA)
			Max.	25 Ω (I_{ON}=120 mA)	35 Ω (I_{ON}=120 mA)	35 Ω (I_{ON}=80 mA)
	OFF-state leakage current (I_{LEAK})	At V_{OFF}	Max.	1.0 μA	1.0 μA	1.0 μA
	Capacitance	C_{OFF}	Typical	—	—	—
			Max.	—	—	—
Transfer characteristics	I/O capacitance	($C_{I/O}$)	Typical	0.8 pF	0.8 pF	0.8 pF
	I/O resistance	(R_{IO})	Min.	1000 MΩ	1000 MΩ	1000 MΩ
	Operate time	(t_{ON})	Max.	1.0 ms	1.0 ms	0.5 ms
	Release time	(t_{OFF})	Max.	3.0 ms	1.0 ms	0.5 ms

Optimum Operating Conditions

Parameter	Comments and conditions		G3VM-353G, G3VM-353G(TR)	G3VM-401G, G3VM-401G(TR)	G3VM-41GR3, G3VM-41GR3(TR)
Output voltage strength	V_{DD}	Max.	280 V	320 V	32 V
Operate LED forward current	I_F	Min.	5 mA	5 mA	10 mA
		Typical	—	7.5 mA	—
		Max.	25 mA	25 mA	30 mA
Continuous load current	I_O	Max.	120 mA	120 mA	80 mA
Ambient temperature	T_A		-20° to 65°C	-20° to 65°C	-25° to 60°C

Dimensions

Item	G3VM-353G, G3VM-353G(TR)	G3VM-401G, G3VM-401G(TR)	G3VM-41GR3, G3VM-41GR3(TR)
Dimensions	See pages 96, 100	See pages 96, 100	See pages 96, 100

Connections

G3VM-353G, -353G(TR), -401D, -401D(TR), -41GR3, -41GR3(TR)

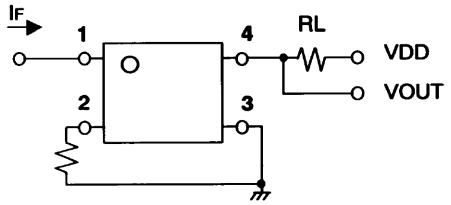

Timing Chart

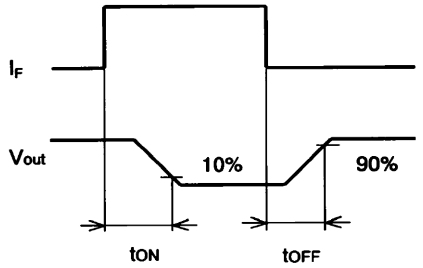

G3VM-41GR4(TR), -41GR5(TR), -41GR6(TR)

Maximum Rating

Parameter		Comments and conditions		G3VM-41GR4, G3VM-41GR4(TR)	G3VM-41GR5, G3VM-41GR5(TR)	G3VM-41GR6, G3VM-41GR6(TR)
Contact form/no. of terminals		—		1 Form A/4 pins	1 Form A/4 pins	1 Form A/4 pins
Input (LED)	LED forward current	I_F	Typical	50 mA	50 mA	50 mA
		I_{FP} (100 μs pulse, 100 pps)	Max.	1 A	1 A	1 A
	Forward current derating	Ta ≥ 25°C		-0.5 mA/°C	-0.5 mA/°C	-0.5 mA/°C
	Reverse voltage	V_R	Max.	5 V	5 V	5 V
	Junction temperature (T_J)			125°C	125°C	125°C
Output (Detector)	Output voltage strength	V_{OFF}		40 V	40 V	40 V
	Continuous load current	I_O		250 mA	300 mA	120 mA
	ON-state current derating	Ta ≥ 25°C		-2.5 mA/°C	-3.0 mA/°C	-1.2 mA/°C
	Junction temperature (T_J)			125°C	125°C	125°C
Dielectric strength		$V_{I/O}$ for 1 minute min.		1500 VAC	1500 VAC	1500 VAC
Temperature	Ambient	Ta with no icing		-20° to +85°C	-20° to +85°C	-20° to +85°C
	Storage	Tstg with no icing		-55° to +125°C	-40° to +125°C	-55° to +125°C

Electrical Characteristics

Parameter		Comments and conditions		G3VM-41GR4, G3VM-41GR4(TR)	G3VM-41GR5, G3VM-41GR5(TR)	G3VM-41GR6, G3VM-41GR6(TR)
Input	LED forward voltage (V_F)	I_F=10 mA	Min.	1.0 V	1.0 V	1.0 V
			Typical	1.15 V	1.15 V	1.15 V
			Max.	1.3 V	1.3 V	1.3 V
	Reverse current	I_R	Max.	10 μA	10 μA	10 μA
	Reverse voltage	V_R	Max.	5 V	5 V	5 V
	Capacitance (C_T)	V = 0; freq. = 1 MHz	Typical	15 pF	15 pF	15 pF
	Keep ON LED current (I_{FT})	At I_{ON}	Typical	—	—	—
			Max.	4 mA (I_{ON}=100 mA)	4 mA (I_{ON}=100 mA)	4 mA (I_{ON}=100 mA)
Output	ON-resistance (R_{ON})	I_F=5 mA	Typical	2 Ω (I_{ON}=250 mA)	1.0 Ω (I_{ON}=120 mA)	10 Ω (I_{ON}=120 mA)
			Max.	3 Ω (I_{ON}=250 mA)	1.5 Ω (I_{ON}=120 mA)	15 Ω (I_{ON}=120 mA)
	OFF-state leakage current (I_{LEAK})	At V_{OFF}	Max.	1.0 μA	1.0 μA	1.0 μA
	Capacitance	C_{OFF}	Typical	5.0 pF	10 pF	1.0 pF
			Max.	7.0 pF	14 pF	2.0 pF
Transfer characteristics	I/O capacitance	($C_{I/O}$)	Typical	0.8 pF	0.8 pF	0.8 pF
	I/O resistance	(R_{IO})	Min.	1000 MΩ	1000 MΩ	1000 MΩ
	Operate time	(t_{ON})	Max.	0.5 ms	0.5 ms	0.5 ms
	Release time	(t_{OFF})	Max.	0.5 ms	0.5 ms	0.5 ms

Optimum Operating Conditions

Parameter	Comments and conditions		G3VM-41GR4, G3VM-41GR4(TR)	G3VM-41GR5, G3VM-41GR5(TR)	G3VM-41GR6, G3VM-41GR6(TR)
Output voltage strength	V_{DD}	Max.	32 V	32 V	32 V
Operate LED forward current	I_F	Min.	10 mA	10 mA	10 mA
		Typical	—	—	—
		Max.	30 mA	30 mA	30 mA
Continuous load current	I_O	Max.	250 mA	300 mA	120 mA
Ambient temperature	T_A		-25° to 60°C	-25° to 60°C	-25° to 60°C

Dimensions

Item	G3VM-41GR4, G3VM-41GR4(TR)	G3VM-41GR5, G3VM-41GR5(TR)	G3VM-41GR6, G3VM-41GR6(TR)
Dimensions	See pages 96, 100	See pages 96, 100	See pages 96, 100

Connections

G3VM-41GR4, -41GR4(TR), -41GR5, -41GR5(TR), - 41GR6, -41GR6(TR)

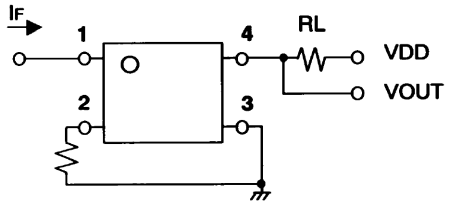

Timing Chart

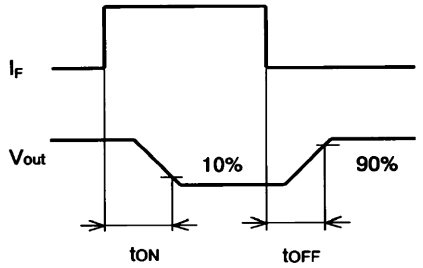

G3VM-61G1(TR), -81G1(TR), -S1(TR)

Maximum Rating

Parameter		Comments and conditions		G3VM-61G1, G3VM-61G1(TR)	G3VM-81G1, G3VM-81G1(TR)	G3VM-S1, G3VM-S1(TR)
Contact form/no. of terminals		—		1 Form A/4 pins	1 Form A/4 pins	1 Form A/4 pins
Input (LED)	LED forward current	I_F	Typical	50 mA	50 mA	50 mA
		I_{FP} (100 μs pulse, 100 pps)	Max.	1 A	1 A	1 A
	Forward current derating	Ta ≥ 25°C		-0.5 mA/°C	-0.5 mA/°C	-0.5 mA/°C
	Reverse voltage	V_R	Max.	5 V	5 V	5 V
	Junction temperature (T_J)			125°C	125°C	125°C
Output (Detector)	Output voltage strength	V_{OFF}		60 V	80 V	60 V
	Continuous load current	I_O		400 mA	350 mA	400 mA
	ON-state current derating	Ta ≥ 25°C		-4.0 mA/°C	-3.5 mA/°C	-4.0 mA/°C
	Junction temperature (T_J)			125°C	125°C	125°C
Dielectric strength		$V_{I/O}$ for 1 minute min.		1500 VAC	1500 VAC	1500 VAC
Temperature	Ambient	Ta with no icing		-40° to +85°C	-40° to +85°C	-40° to +85°C
	Storage	Tstg with no icing		-55° to +125°C	-55° to +125°C	-55° to +125°C

Electrical Characteristics

Parameter		Comments and conditions		G3VM-61G1, G3VM-61G1(TR)	G3VM-81G1, G3VM-81G1(TR)	G3VM-S1, G3VM-S1(TR)
Input	LED forward voltage (V_F)	I_F=10 mA	Min.	1.0 V	1.0 V	1.0 V
			Typical	1.15 V	1.15 V	1.15 V
			Max.	1.3 V	1.3 V	1.3 V
	Reverse current	I_R	Max.	10 μA	10 μA	10 μA
	Reverse voltage	V_R	Max.	5 V	5 V	5 V
	Capacitance (C_T)	V = 0; freq. = 1 MHz	Typical	30 pF	15 pF	30 pF
	Keep ON LED current (I_{FT})	At I_O	Typical	1.6 mA	1.0 mA	1 mA
			Max.	3 mA	4.0 mA	3 mA
Output	ON-resistance (R_{ON})	I_F=5 mA	Typical	1 Ω (I_{ON}=400 mA)	1.0 Ω (I_{ON}=350 mA)	1 Ω (I_{ON}=400 mA)
			Max.	2 Ω (I_{ON}=400 mA)	1.2 Ω (I_{ON}=350 mA)	2 Ω (I_{ON}=400 mA)
	OFF-state leakage current (I_{LEAK})	At V_{OFF}	Max.	1.0 μA	1.0 μA	1.0 μA
	Limit current	(I_{LIM})	Min.	—	—	—
			Max.	—	—	—
Transfer characteristics	I/O capacitance	($C_{I/O}$)	Typical	0.8 pF	0.8 pF	0.8 pF
	I/O resistance	(R_{IO})	Min.	1000 MΩ	1000 MΩ	1000 MΩ
	Operate time	(t_{ON})	Max.	2.0 ms	0.5 ms	2.0 ms
	Release time	(t_{OFF})	Max.	0.5 ms	0.5 ms	1.0 ms

Optimum Operating Conditions

Parameter	Comments and conditions		G3VM-61G1, G3VM-61G1(TR)	G3VM-81G1, G3VM-81G1(TR)	G3VM-S1, G3VM-S1(TR)
Output voltage strength	V_{DD}	Max.	48 V	64 V	48 V
Operate LED forward current	I_F	Min.	5 mA	5 mA	5 mA
		Typical	7.5 mA	—	7.5 mA
		Max.	25 mA	30 mA	25 mA
Continuous load current	I_O	Max.	400 mA	350 mA	300 mA
Ambient temperature	T_A		-20° to 65°C	-25° to 60°C	-20° to 65°C

Dimensions

Item	G3VM-61G1, G3VM-61G1(TR)	G3VM-81G1, G3VM-81G1(TR)	G3VM-S1, G3VM-S1(TR)
Dimensions	See pages 96, 100	See pages 96, 100	See pages 96, 100

Connections

G3VM-61G1, -61G1(TR), -81G1, -81G1(TR), -S1, -S1(TR)

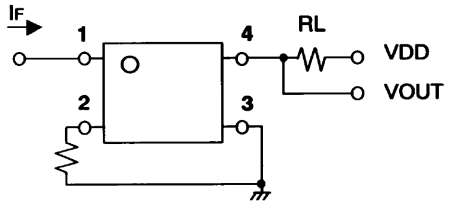

Timing Chart

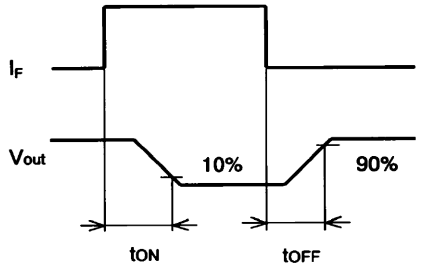

G3VM-S2(TR), -S5(TR), -351H(TR)

Maximum Rating

Parameter		Comments and conditions		G3VM-S2, G3VM-S2(TR)	G3VM-S5, G3VM-S5(TR)	G3VM-351H, G3VM-351H(TR)
Contact form/no. of terminals		—		1 Form A/4 pins	1 Form A/4 pins	1 Form A/6 pins
Input (LED)	LED forward current	I_F	Typical	50 mA	50 mA	50 mA
		I_{FP} (100 μs pulse, 100 pps)	Max.	1 A	1 A	1 A
	Forward current derating	Ta ≥ 25°C		-0.5 mA/°C	-0.5 mA/°C	-0.5 mA/°C
	Reverse voltage	V_R	Max.	5 V	5 V	5 V
	Junction temperature (T_J)			125°C	125°C	125°C
Output (Detector)	Output voltage strength	V_{OFF}		350 V	200 V	350 V
	Continuous load current	I_O		120 mA	150 mA	110 mA (for A) 110 mA (for B) 220 mA (for C)
	ON-state current derating	Ta ≥ 25°C		-1.2 mA/°C	-1.5 mA/°C	-1.1 mA/°C (for A)
	Junction temperature (T_J)			125°C	125°C	125°C
Dielectric strength		$V_{I/O}$ for 1 minute min.		1500 VAC	1500 VAC	1500 VAC
Temperature	Ambient	Ta with no icing		-40° to +85°C	-40° to +85°C	-40° to +85°C
	Storage	Tstg with no icing		-55° to +125°C	-55° to +100°C	-55° to +125°C

Electrical Characteristics

Parameter		Comments and conditions		G3VM-S2, G3VM-S2(TR)	G3VM-S5, G3VM-S5(TR)	G3VM-351H, G3VM-351H(TR)
Input	LED forward voltage (V_F)	I_F=10 mA	Min.	1.0 V	1.0 V	1.0 V
			Typical	1.15 V	1.15 V	1.15 V
			Max.	1.3 V	1.3 V	1.3 V
	Reverse current	I_R		10 μA	10 μA	10 μA
	Reverse voltage	V_R	Max.	5 V	5 V	5 V
	Capacitance (CT)	V = 0; freq. = 1 MHz		30 pF	30 pF	30 pF
	Keep ON LED current (I_{FT})	At I_O	Typical	1 mA	1 mA	1 mA
			Max.	3 mA	3 mA	3 mA
Output	ON-resistance (R_{ON})	I_F=5 mA	Typical	22 Ω (I_{ON}=120 mA)	5 Ω (I_{ON}=150 mA)	35 Ω (I_{ON}=110 mA) for connection A
			Max.	35 Ω (I_{ON}=120 mA)	8 Ω (I_{ON}=150 mA)	50 Ω (I_{ON}=110 mA) for connection A
			Typical	—	—	28 Ω (I_{ON}=110 mA) for connection B
			Max.	—	—	40 Ω (I_{ON}=110 mA) for connection B
			Typical	—	—	14 Ω (I_{ON}=220 mA) for connection C
			Max.	—	—	20 Ω (I_{ON}=220 mA) for connection C
	OFF-state leakage current (I_{LEAK})	At V_{OFF}	Max.	1.0 μA	1.0 μA	1.0 μA
Transfer characteristics	I/O capacitance	($C_{I/O}$)	Typical	0.8 pF	0.8 pF	0.8 pF
	I/O resistance	(R_{IO})	Min.	1000 MΩ	1000 MΩ	1000 MΩ
	Operate time	(t_{ON})	Max.	1.0 ms	1.5 ms	1.0 ms
	Release time	(t_{OFF})	Max.	1.0 ms	1.0 ms	1.0 ms

Optimum Operating Conditions

Parameter	Comments and conditions		G3VM-S2, G3VM-S2(TR)	G3VM-S5, G3VM-S5(TR)	G3VM-351H, G3VM-351H(TR)
Output voltage strength	V_{DD}	Max.	280 V	200 V	280 V
Operate LED forward current	I_F	Min.	5 mA	5 mA	5 mA
		Typical	7.5 mA	7.5 mA	10 mA
		Max.	25 mA	25 mA	25 mA
Continuous load current	I_O	Max.	100 mA	120 mA	100 mA
Ambient temperature	T_A		-20° to 65°C	-20° to 65°C	-20° to 65°C

Dimensions

Item	G3VM-S2, G3VM-S2(TR)	G3VM-S5, G3VM-S5(TR)	G3VM-351H, G3VM-351H(TR)
Dimensions	See pages 96, 100	See pages 96, 100	See pages 96, 101

Connections

G3VM-S2, -S2(TR), -S5, -S5(TR)

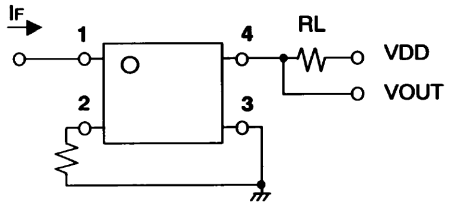

G3VM-351H, -351H(TR)

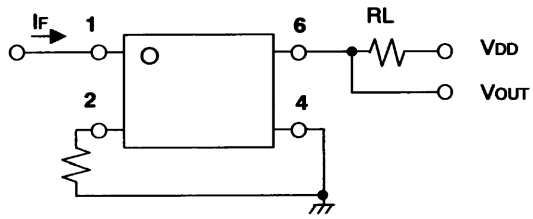

G3VM-351H, -351H(TR)

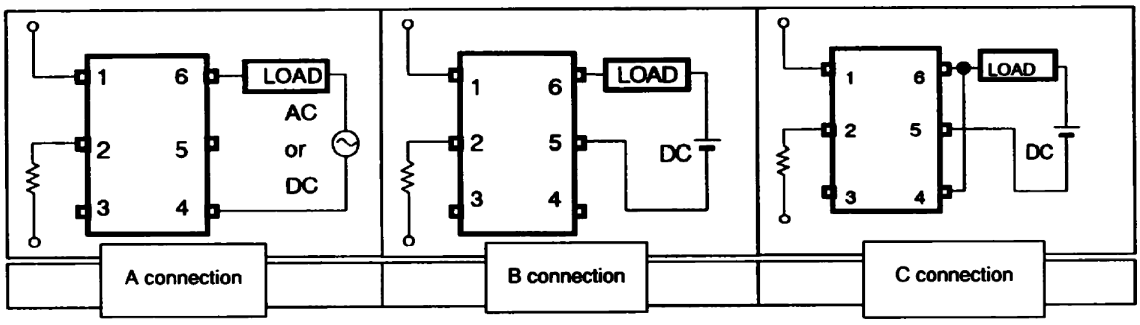

Timing Chart

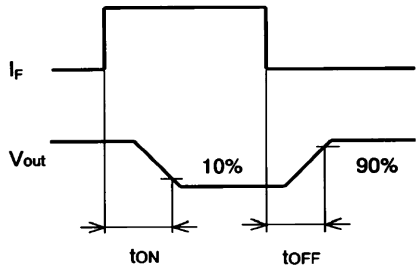

G3VM-353H(TR), -61H1(TR), -81HR(TR)

Maximum Rating

Parameter		Comments and conditions		G3VM-353H, G3VM-353H(TR)	G3VM-61H1, G3VM-61H1(TR)	G3VM-81HR, G3VM-81HR(TR)
Contact form/no. of terminals		—		1 Form B/6 pins	1 Form A/6 pins	1 Form A/6 pins
Input (LED)	LED forward current	I_F	Typical	50 mA	50 mA	50 mA
		I_{FP} (100 μs pulse, 100 pps)	Max.	1 A	1 A	1 A
	Forward current derating	Ta ≥ 25°C		-0.5 mA/°C	-0.5 mA/°C	-0.5 mA/°C
	Reverse voltage	V_R	Max.	5 V	5 V	5 V
	Junction temperature (T_J)			125°C	125°C	125°C
Output (Detector)	Output voltage strength	V_{OFF}		350 V	60 V	80 V
	Continuous load current	I_O		120 mA (for A) 120 mA (for B) 240 mA (for C)	400 mA (for A) 400 mA (for B) 800 mA (for C)	1250 mA
	ON-state current derating	Ta ≥ 25°C		-1.2 mA/°C	-4.0 mA/°C	-12.5 mA/°C
	Junction temperature (T_J)			125°C	125°C	125°C
Dielectric strength		$V_{I/O}$ for 1 minute min.		1500 VAC	1500 VAC	1500 VAC
Temperature	Ambient	Ta with no icing		-40° to +85°C	-40° to +85°C	-20° to +85°C
	Storage	Tstg with no icing		-55° to +125°C	-55° to +125°C	-40° to +125°C

Electrical Characteristics

Parameter		Comments and conditions		G3VM-353H, G3VM-353H(TR)	G3VM-61H1, G3VM-61H1(TR)	G3VM-81HR, G3VM-81HR(TR)
Input	LED forward voltage (V_F)	I_F=10 mA	Min.	1.0 V	1.0 V	1.0 V
			Typical	1.15 V	1.15 V	1.15 V
			Max.	1.3 V	1.3 V	1.3 V
	Reverse current	I_R	Max.	10 μA	10 μA	10 μA
	Reverse voltage	V_R	Max.	5 V	5 V	5 V
	Capacitance (C_T)	V = 0; freq. = 1 MHz	Typical	30 pF	30 pF	15 pF
	Keep ON LED current (I_{FT})	At I_O	Typical	1 mA	1.6 mA	2 mA
			Max.	3 mA	3 mA	5 mA
Output	ON-resistance (R_{ON})	I_F=5 mA	Typical	15 Ω (I_{ON}=120 mA) for connection A	1 Ω (I_{ON}=400 mA) for connection A	0.11 Ω (I_{ON}=1250 mA)
			Max.	25 Ω (I_{ON}=120 mA) for connection A	2 Ω (I_{ON}=400 mA) for connection A	0.15 Ω (I_{ON}=1250 mA)
			Typical	8 Ω (I_{ON}=120 mA) for connection B	0.5 Ω (I_{ON}=400 mA) for connection B	—
			Max.	14 Ω (I_{ON}=120 mA) for connection B	1 Ω (I_{ON}=400 mA) for connection B	—
			Typical	4 Ω (I_{ON}=240 mA) for connection C	0.25 Ω (I_{ON}=800 mA) for connection C	—
			Max.	—	—	—
	OFF-state leakage current (I_{LEAK})	At V_{OFF}	Max.	1.0 μA	1.0 μA	1.5 μA
Transfer characteristics	I/O capacitance	($C_{I/O}$)	Typical	0.8 pF	0.8 pF	0.8 pF
	I/O resistance	(R_{IO})	Min.	1000 MΩ	1000 MΩ	1000 MΩ
	Operate time	(t_{ON})	Max.	1.0 ms	2.0 ms	3.0 ms
	Release time	(t_{OFF})	Max.	3.0 ms	0.5 ms	1.0 ms

Optimum Operating Conditions

Parameter	Comments and conditions		G3VM-353H, G3VM-353H(TR)	G3VM-61H1, G3VM-61H1(TR)	G3VM-81HR, G3VM-81HR(TR)
Output voltage strength	V_{DD}	Max.	280 V	48V	64 V
Operate LED forward current	I_F	Min.	5 mA	5 mA	5 mA
		Typical	—	7.5 mA	—
		Max.	25 mA	25 mA	30 mA
Continuous load current	I_O	Max.	120 mA	400 mA	1250 mA
Ambient temperature	T_A		-20° to 65°C	-20° to 65°C	-25° to 60°C

Dimensions

Item	G3VM-353H, G3VM-353H(TR)	G3VM-61H1, G3VM-61H1(TR)	G3VM-81HR, G3VM-81HR(TR)
Dimensions	See pages 96, 101	See pages 96, 101	See pages 96, 101

Connections

G3VM-353H, -353H(TR), -61H1, -61H1(TR), -81HR, -81HR(TR)

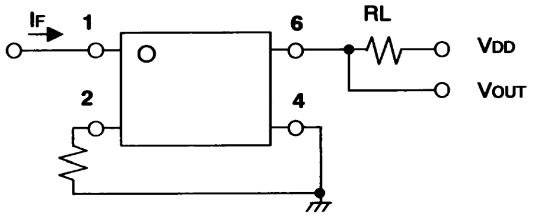

G3VM-353H, -353H(TR), -61H1, -61H1(TR), -81HR, -81HR(TR)

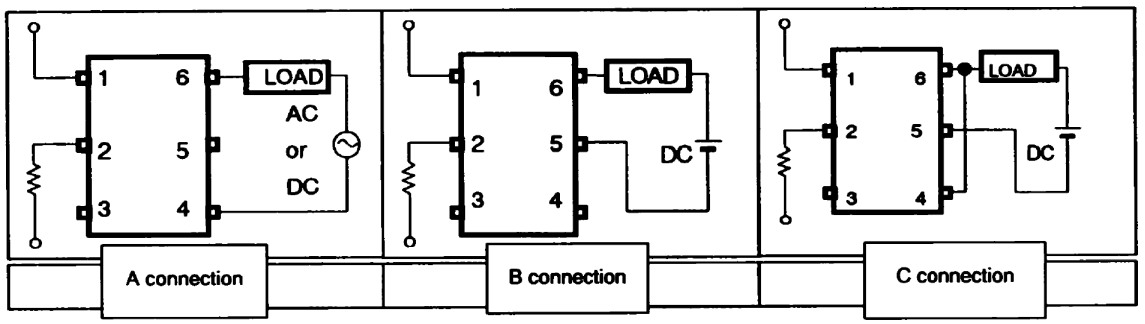

Timing Chart

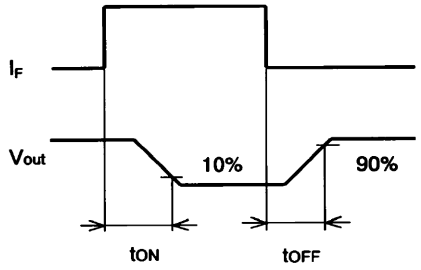

G3VM-S3(TR), -355JR(TR), -352J(TR)

Maximum Rating

Parameter		Comments and conditions		G3VM-S3, G3VM-S3(TR)	G3VM-355JR, G3VM-355JR(TR)	G3VM-352J, G3VM-352J(TR)
Contact form/no. of terminals		—		1 Form A/6 pins	1FormA+1FormB/ 8 pins	2 Form A/8 pins
Input (LED)	LED forward current	I_F	Typical	50 mA	50 mA	50 mA
		I_{FP} (100 μs pulse, 100 pps)	Max.	1 A	1 A	1 A
	Forward current derating	Ta ≥ 25°C		-0.5 mA/°C	-0.5 mA/°C	-0.5 mA/°C
	Reverse voltage	V_R	Max.	5 V	5 V	5 V
	Junction temperature (T_J)			125°C	125°C	125°C
Output (Detector)	Output voltage strength	V_{OFF}		350 V	350 V	350 V
	Continuous load current	I_O		120 mA (for A) 120 mA (for B) 160 mA (for C)	120 mA	110 mA
	ON-state current derating	Ta ≥ 25°C		-1.2 mA/°C	-1.2 mA/°C	-1.1 mA/°C
	Junction temperature (T_J)			125°C	125°C	125°C
Dielectric strength		$V_{I/O}$ for 1 minute min.		1500 VAC	2500 VAC	1500 VAC
Temperature	Ambient	Ta with no icing		-20° to +85°C	-40° to +85°C	-40° to +85°C
	Storage	Tstg with no icing		-55° to +125°C	-55° to +125°C	-55° to +125°C

Electrical Characteristics

Parameter		Comments and conditions		G3VM-S3, G3VM-S3(TR)	G3VM-355JR, G3VM-355JR(TR)	G3VM-352J, G3VM-352J(TR)
Input	LED forward voltage (V_F)	I_F=10 mA	Min.	1.0 V	1.0 V	1.0 V
			Typical	1.15 V	1.15 V	1.15 V
			Max.	1.3 V	1.3 V	1.3 V
	Reverse current	I_R	Max.	10 μA	10 μA	10 μA
	Reverse voltage	V_R	Max.	5 V	5 V	5 V
	Capacitance (C_T)	V = 0; freq. = 1 MHz	Typical	30 pF	30 pF	30 pF
	Keep ON LED current (I_{FT})	At I_O	Typical	—	1 mA	1 mA
			Max.	3 mA	3 mA	3 mA
Output	ON-resistance (R_{ON})	I_F=5 mA	Typical	22 Ω (I_{ON}=120 mA) for connection A	15 Ω (I_{ON}=120 mA)	35 Ω (25 Ω, t < 1s)
			Max.	35 Ω (I_{ON}=120 mA) for connection A	25 Ω (I_{ON}=120 mA)	50 Ω (35 Ω, t < 1s)
			Typical	—	—	—
			Max.	25 Ω (I_{ON}=120 mA) for connection B	—	—
			Typical	—	—	—
			Max.	15 Ω (I_{ON}=160 mA) for connection C	—	—
	OFF-state leakage current (I_{LEAK})	At V_{OFF}	Max.	1.0 μA	1.0 μA	1.0 μA
Transfer characteristics	I/O capacitance	($C_{I/O}$)	Typical	0.8 pF	0.8 pF	0.8 pF
	I/O resistance	(R_{IO})	Min.	1000 MΩ	1000 MΩ	1000 MΩ
	Operate time	(t_{ON})	Max.	1.0 ms	1.0 ms	1.0 ms
	Release time	(t_{OFF})	Max.	1.0 ms	1.0 ms	1.0 ms

Optimum Operating Conditions

Parameter	Comments and conditions		G3VM-S3, G3VM-S3(TR)	G3VM-355JR, G3VM-355JR(TR)	G3VM-352J, G3VM-352J(TR)
Output voltage strength	V_{DD}	Max.	280 V	280V	280 V
Operate LED forward current	I_F	Min.	5 mA	5 mA	5 mA
		Typical	7.5 mA	—	10 mA
		Max.	25 mA	25 mA	25 mA
Continuous load current	I_O	Max.	100 mA	120 mA	100 mA
Ambient temperature	T_A		-20° to 65°C	-20° to 65°C	-20° to 65°C

Dimensions

Item	G3VM-S3, G3VM-S3(TR)	G3VM-355JR, G3VM-355JR(TR)	G3VM-352J, G3VM-352J(TR)
Dimensions	See pages 96, 101	See pages 97, 102	See pages 97, 102

Connections

G3VM-S3, -S3(TR)

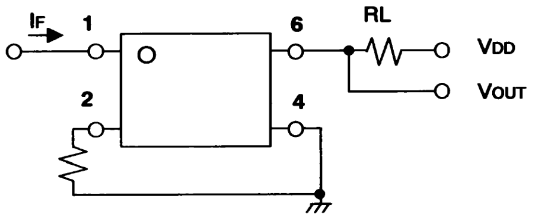

G3VM-352J, -352J(TR)

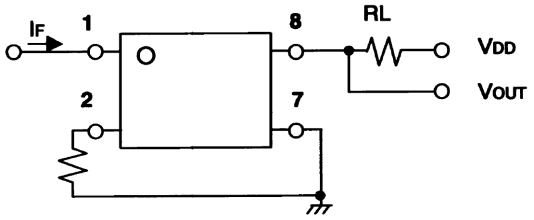

G3VM-S3, -S3(TR)

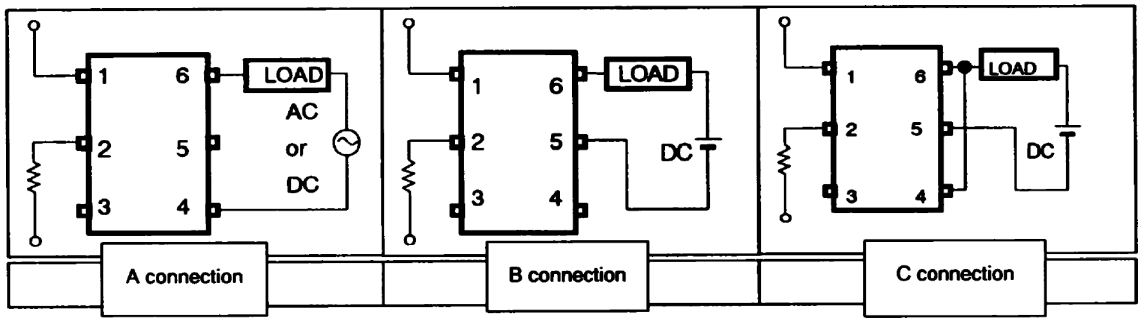

G3VM-355JR, -355JR(TR)

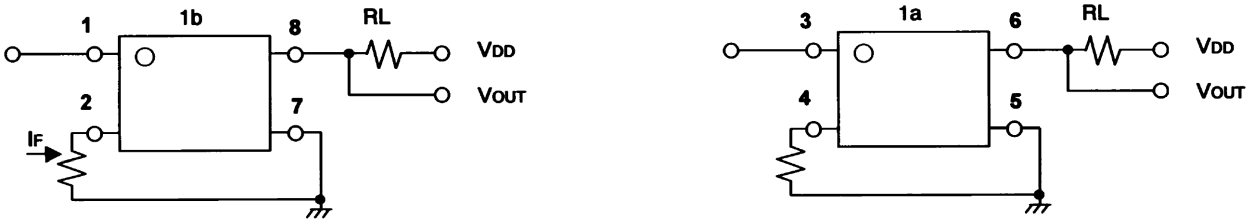

Timing Chart

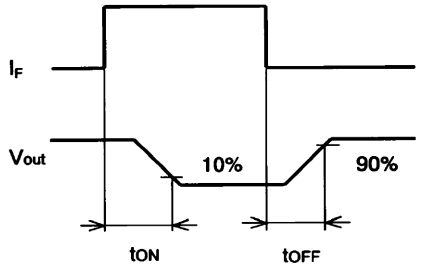

G3VM-402J(TR), -62J1(TR), -SW(TR)

Maximum Rating

Parameter		Comments and conditions		G3VM-402J, G3VM-402J(TR)	G3VM-62J1, G3VM-62J1(TR)	G3VM-SW, G3VM-SW(TR)
Contact form/no. of terminals		—		2 Form A/8 pins	2 Form A/8 pins	2 Form A/ 8 pins
Input (LED)	LED forward current	I_F	Typical	50 mA	50 mA	50 mA
		I_{FP} (100 μs pulse, 100 pps)	Max.	1 A	1 A	1 A
	Forward current derating	Ta ≥ 25°C		-0.5 mA/°C	-0.5 mA/°C	-0.5 mA/°C
	Reverse voltage	V_R	Max.	5 V	5 V	5 V
	Junction temperature (T_J)			125°C	125°C	125°C
Output (Detector)	Output voltage strength	V_{OFF}		400 V	60 V	350 V, DC or AC peak
	Continuous load current	I_O		120 mA	400 mA	100 mA (1+2 ch) 120 mA (1 ch)
	ON-state current derating	Ta ≥ 25°C		-1.2 mA/°C	-4.0 mA/°C	-1.2 mA/°C (1 ch)
	Junction temperature (T_J)			125°C	125°C	125°C
Dielectric strength		$V_{I/O}$ for 1 minute min.		1500 VAC	1500 VAC	1500 VAC
Temperature	Ambient	Ta with no icing		-40° to +85°C	-40° to +85°C	-40° to +85°C
	Storage	Tstg with no icing		-55° to +125°C	-55° to +125°C	-55° to +125°C

Electrical Characteristics

Parameter		Comments and conditions		G3VM-402J, G3VM-402J(TR)	G3VM-62J1, G3VM-62J1(TR)	G3VM-SW, G3VM-SW(TR)
Input	LED forward voltage (V_F)	I_F=10 mA	Min.	1.0 V	1.0 V	1.0 V
			Typical	1.15 V	1.15 V	1.15 V
			Max.	1.3 V	1.3 V	1.3 V
	Reverse current	I_R	Max.	10 μA	10 μA	10 μA
	Reverse voltage	V_R	Max.	5 V	5 V	5 V
	Capacitance (C_T)	V = 0; freq. = 1 MHz	Typical	30 pF	30 pF	30 pF
	Keep ON LED current (I_{FT})	At I_O	Typical	1 mA	1.6 mA	—
			Max.	3 mA	3 mA	3 mA
Output	ON-resistance (R_{ON})	I_F=5 mA (1a)	Typical	17 Ω (I_{ON}=120 mA)	1.0 Ω (I_{ON}=400 mA)	22 Ω (I_{ON}=120 mA)
			Max.	35 Ω (I_{ON}=120 mA)	2.0 Ω (I_{ON}=400 mA)	35 Ω (I_{ON}=120 mA)
		I_F=0 mA (1b)	Typical	—	—	—
			Max.	—	—	—
	OFF-state leakage current (I_{LEAK})	At V_{OFF}	Max.	1.0 μA	1.0 μA	1.0 μA
	Capacitance	C_{OFF}	Typical	—	—	—
			Max.	—	—	—
Transfer characteristics	I/O capacitance	($C_{I/O}$)	Typical	0.8 pF	0.8 pF	0.8 pF
	I/O resistance	(R_{IO})	Min.	1000 MΩ	1000 MΩ	1000 MΩ
	Operate time	(t_{ON})	Max.	1.0 ms	2.0 ms	1.0 ms
	Release time	(t_{OFF})	Max.	1.0 ms	0.5 ms	1.0 ms

Optimum Operating Conditions

Parameter	Comments and conditions		G3VM-402J, G3VM-402J(TR)	G3VM-62J1, G3VM-62J1(TR)	G3VM-SW, G3VM-SW(TR)
Output voltage strength	V_{DD}	Max.	320 V	48 V	280 V
Operate LED forward current	I_F	Min.	5 mA	5 mA	5 mA
		Typical	7.5 mA	7.5 mA	7.5 mA
		Max.	25 mA	25 mA	25 mA
Continuous load current	I_O	Max.	120 mA	400 mA	100 mA
Ambient temperature	T_A		-20° to 65°C	-20° to 65°C	-20° to 65°C

Dimensions

Item	G3VM-402J, G3VM-402J(TR)	G3VM-62J1, G3VM-62J1(TR)	G3VM-SW, G3VM-SW(TR)
Dimensions	See pages 97, 102	See pages 97, 102	See pages 97, 102

Connections

G3VM-402J, -402J(TR), -62J1, -62J1(TR), -SW, -SW(TR)

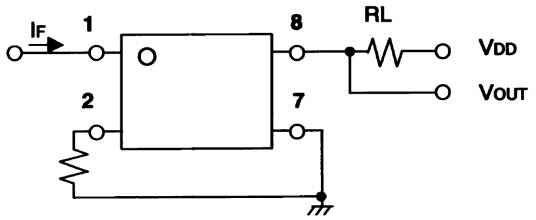

Timing Chart

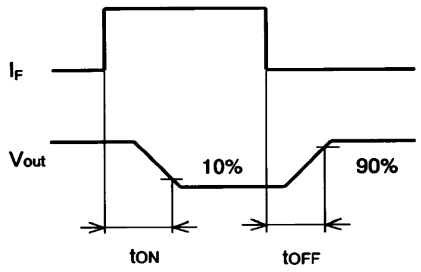

G3VM-SY(TR), -354J(TR)

Maximum Rating

Parameter		Comments and conditions		G3VM-SY, G3VM-SY(TR)	G3VM-354J, G3VM-354J(TR)
Contact form/no. of terminals		—		2 Form A/8 pins	2 Form B/8 pins
Input (LED)	LED forward current	I_F	Typical	50 mA	50 mA
		I_{FP} (100 μs pulse, 100 pps)	Max.	1 A	1 A
	Forward current derating	Ta ≥ 25°C		-0.5 mA/°C	-0.5 mA/°C
	Reverse voltage	V_R	Max.	5 V	5 V
	Junction temperature (T_J)			125°C	125°C
Output (Detector)	Output voltage strength	V_{OFF}		60 V	350 V
	Continuous load current	I_O		200 mA (1+2 ch) 300 mA (1 ch)	120 mA
	ON-state current derating	Ta ≥ 25°C		-3.0 mA/°C (1 ch)	-1.2 mA/°C
	Junction temperature (T_J)			125°C	125°C
Dielectric strength		$V_{I/O}$ for 1 minute min.		1500 VAC	1500 VAC
Temperature	Ambient	Ta with no icing		-20° to +85°C	-40° to +85°C
	Storage	Tstg with no icing		-55° to +125°C	-55° to +125°C

Electrical Characteristics

Parameter		Comments and conditions		G3VM-SY, G3VM-SY(TR)	G3VM-354J, G3VM-354J(TR)
Input	LED forward voltage (V_F)	I_F=10 mA	Min.	1.0 V	1.0 V
			Typical	1.15 V	1.15 V
			Max.	1.3 V	1.3 V
	Reverse current	I_R	Max.	10 μA	10 μA
	Reverse voltage	V_R	Max.	5 V	5 V
	Capacitance (C_T)	V = 0; freq. = 1 MHz	Typical	30 pF	30 pF
	Keep ON LED current (I_{FT})	At I_O	Typical	—	1 mA
			Max.	3 mA	3 mA
Output	ON-resistance (R_{ON})	I_F=5 mA	Typical	1.4 Ω (I_{ON}=300 mA)	15 Ω (I_{ON}=120 mA)
			Max.	2.0 Ω (I_{ON}=300 mA)	25 Ω (I_{ON}=120 mA)
	OFF-state leakage current (I_{LEAK})	At V_{OFF}	Max.	1.0 μA	1.0 μA
	Capacitance	C_{OFF}	Typical	—	—
			Max.	—	—
Transfer characteristics	I/O capacitance	($C_{I/O}$)	Typical	0.8 pF	0.8 pF
	I/O resistance	(R_{IO})	Min.	1000 MΩ	1000 MΩ
	Operate time	(t_{ON})	Max.	2.0 ms	1.0 ms
	Release time	(t_{OFF})	Max.	1.0 ms	3.0 ms

Optimum Operating Conditions

Parameter	Comments and conditions		G3VM-SY, G3VM-SY(TR)	G3VM-354J, G3VM-354J(TR)
Output voltage strength	V_{DD}	Max.	48 V	280 V
Operate LED forward current	I_F	Min.	5 mA	5 mA
		Typical	10 mA	—
		Max.	25 mA	25 mA
Continuous load current	I_O	Max.	200 mA	120 mA
Ambient temperature	T_A		-20° to 65°C	-20° to 65°C

Dimensions

Item	G3VM-SY, G3VM-SY(TR)	G3VM-354J, G3VM-354J(TR)
Dimensions	See pages 97, 102	See pages 97, 102

Connections

G3VM-SY, -SY(TR), -354J, -354J(TR)

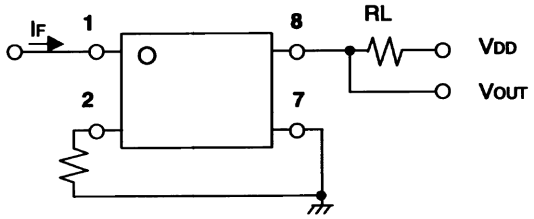

Timing Chart

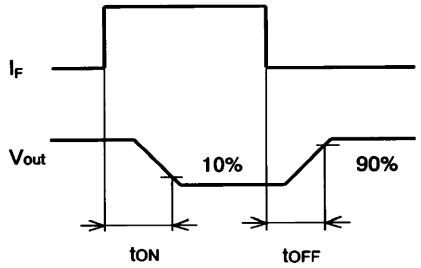

G3VM-21LR, -21LR1, -41LR3

Maximum Rating

Parameter		Comments and conditions		G3VM-21LR	G3VM-21LR1	G3VM-41LR3
Contact form/no. of terminals		—		1 Form A/4 pins	1 Form A/4 pins	1 Form A/4 pins
Input (LED)	LED forward current	I_F	Typical	50 mA	50 mA	50 mA
		I_{FP} (100 μs pulse, 100 pps)	Max.	1 A	1 A	1 A
	Forward current derating	Ta ≥ 25°C		-0.5 mA/°C	-0.5 mA/°C	-0.5 mA/°C
	Reverse voltage	V_R	Max.	5 V	5 V	5 V
	Junction temperature (T_J)			125°C	125°C	125°C
Output (Detector)	Output voltage strength	V_{OFF}		20 V	20 V	40 V
	Continuous load current	I_O		160 mA	450 mA	80 mA
	ON-state current derating	Ta ≥ 25°C		-1.6 mA/°C	-4.5 mA/°C	-0.8 mA/°C
	Junction temperature (T_J)			125°C	125°C	125°C
Dielectric strength		$V_{I/O}$ for 1 minute min.		1500 VAC	1500 VAC	1500 VAC
Temperature	Ambient	Ta with no icing		-20° to +85°C	-20° to +85°C	-20° to +85°C
	Storage	Tstg with no icing		-40° to +125°C	-40° to +125°C	-40° to +100°C

Electrical Characteristics

Parameter		Comments and conditions		G3VM-21LR	G3VM-21LR1	G3VM-41LR3
Input	LED forward voltage (V_F)	I_F=10 mA	Min.	1.0 V	1.0 V	1.0 V
			Typical	1.15 V	1.15 V	1.15 V
			Max.	1.3 V	1.3 V	1.3 V
	Reverse current	I_R	Max.	10 μA	10 μA	10 μA
	Reverse voltage	V_R	Max.	5 V	5 V	5 V
	Capacitance (C_T)	V = 0; freq. = 1 MHz	Typical	15 pF	15 pF	15 pF
	Keep ON LED current (I_{FT})	At I_O	Typical	—	—	—
			Max.	4 mA (I_O = 100 mA)	4 mA (I_O = 100 mA)	4 mA (I_O = 80 mA)
Output	ON-resistance (R_{ON})	At I_{ON} I_F=5 mA	Typical	5 Ω (I_O = 160 mA)	0.8 Ω (I_{ON} = 450 mA)	25 Ω
			Max.	8 Ω (I_O = 160 mA)	1.2 Ω (I_{ON} = 450 mA)	35 Ω
	OFF-state leakage current (I_{LEAK})	V_{OFF} = 350 V	Max.	1.0 nA	1.0 nA	1.0 nA
	OFF capacitance	C_{OFF}	Min.	1.0 pF	5.0 pF	0.6 pF
			Max.	2.5 pF	12.0 pF	1.4 pF
Transfer characteristics	I/O capacitance	($C_{I/O}$)	Typical	0.8 pF	0.8 pF	0.8 pF
	I/O resistance	(R_{IO})	Min.	1000 MΩ	1000 MΩ	1000 MΩ
	Operate time	(t_{ON})	Max.	0.5 ms	0.5 ms	1.0 ms
	Release time	(t_{OFF})	Max.	0.5 ms	0.5 ms	1.0 ms

Optimum Operating Conditions

Parameter	Comments and conditions		G3VM-21LR	G3VM-21LR1	G3VM-41LR3
Output voltage strength	V_{DD}	Max.	32 V	20 V	32 V
Operate LED forward current	I_F	Min.	7 mA	10 mA	10 mA
		Typical	—	—	—
		Max.	30 mA	30 mA	30 mA
Continuous load current	I_O	Max.	160 mA	450 mA	80 mA
Ambient temperature	T_A		-25° to 60°C	-25° to 60°C	-25° to 60°C

Dimensions

Item	G3VM-21LR	G3VM-21LR1	G3VM-41LR3
Dimensions	See page 97	See page 97	See page 97

Connections

G3VM-21LR, -21LR1, -41LR3

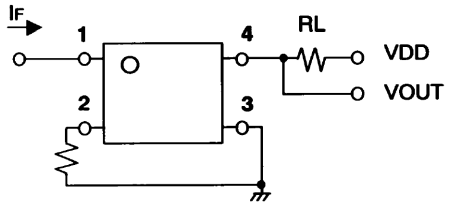

Timing Chart

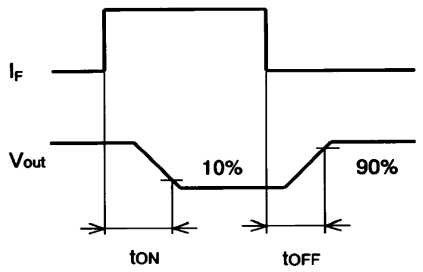

G3VM-41LR4, -41LR5, -41LR6

Maximum Rating

Parameter		Comments and conditions		G3VM-41LR4	G3VM-41LR5	G3VM-41LR6
Contact form/no. of terminals		—		1 Form A/4 pins	1 Form A/4 pins	1 Form A/4 pins
Input (LED)	LED forward current	I_F	Typical	50 mA	50 mA	50 mA
		I_{FP} (100 μs pulse, 100 pps)	Max.	1 A	1 A	1 A
	Forward current derating	Ta ≥ 25°C		-0.5 mA/°C	-0.5 mA/°C	-0.5 mA/°C
	Reverse voltage	V_R	Max.	5 V	5 V	5 V
	Junction temperature (T_J)			125°C	125°C	125°C
Output (Detector)	Output voltage strength	V_{OFF}		40 V	40 V	40 V
	Continuous load current	I_O		250 mA	300 mA	120 mA
	ON-state current derating	Ta ≥ 25°C		-2.5 mA/°C	-3.0 mA/°C	-1.2 mA/°C
	Junction temperature (T_J)			125°C	125°C	125°C
Dielectric strength		$V_{I/O}$ for 1 minute min.		1500 VAC	1500 VAC	1500 VAC
Temperature	Ambient	Ta with no icing		-20° to +85°C	-20° to +85°C	-20° to +85°C
	Storage	Tstg with no icing		-40° to +125°C	-40° to +125°C	-40° to +125°C

Electrical Characteristics

Parameter		Comments and conditions		G3VM-41LR4	G3VM-41LR5	G3VM-41LR6
Input	LED forward voltage (V_F)	I_F=10 mA	Min.	1.0 V	1.0 V	1.0 V
			Typical	1.15 V	1.15 V	1.15 V
			Max.	1.3 V	1.3 V	1.3 V
	Reverse current	I_R	Max.	10 μA	10 μA	10 μA
	Reverse voltage	V_R	Max.	5 V	5 V	5 V
	Capacitance (C_T)	V = 0; freq. = 1 MHz	Typical	15 pF	15 pF	15 pF
	Keep ON LED current (I_{FT})	At I_{ON}	Typical	—	—	—
			Max.	4 mA (I_{ON}=100 mA)	4 mA (I_{ON}=100 mA)	4 mA (I_{ON}=100 mA)
Output	ON-resistance (R_{ON})	At I_O	Typical	2 Ω (I_{ON}=250 mA)	1.0 Ω (I_{ON}=300 mA)	10 Ω (I_{ON}=120 mA)
			Max.	3 Ω (I_{ON}=250 mA)	1.5 Ω (I_{ON}=300 mA)	15 Ω (I_{ON}=120 mA)
	OFF-state leakage current (I_{LEAK})	At V_{OFF}	Max.	1.0 nA	1.0 nA	1.0 nA
	Limit current (I_{LIM})	I_F = 5 mA, V_{DD} = 5 V, t = 5 ms	Min.	5 pF	10 pF	1.0 pF
			Max.	7 pF	14 pF	2.0 pF
Transfer characteristics	I/O capacitance	($C_{I/O}$)	Typical	0.8 pF	0.8 pF	0.8 pF
	I/O resistance	(R_{IO})	Min.	1000 MΩ	1000 MΩ	1000 MΩ
	Operate time	(t_{ON})	Max.	0.5 ms	0.5 ms	0.5 ms
	Release time	(t_{OFF})	Max.	0.5 ms	0.5 ms	0.5 ms

Optimum Operating Conditions

Parameter	Comments and conditions		G3VM-41LR4	G3VM-41LR5	G3VM-41LR6
Output voltage strength	V_{DD}	Max.	32 V	32 V	32 V
Operate LED forward current	I_F	Min.	10 mA	10 mA	10 mA
		Typical	—	—	—
		Max.	30 mA	30 mA	30 mA
Continuous load current	I_O	Max.	250 mA	300 mA	120 mA
Ambient temperature	T_A		-25° to 60°C	-25° to 60°C	-25° to 60°C

Dimensions

Item	G3VM-41LR4	G3VM-41LR5	G3VM-41LR6
Dimensions	See page 97	See page 97	See page 97

Connections

G3VM-41LR, -41L5, -41LR6

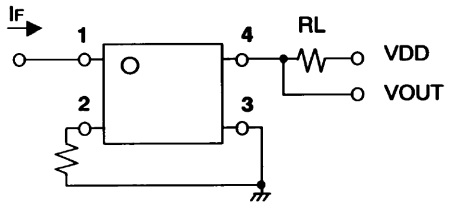

Timing Chart

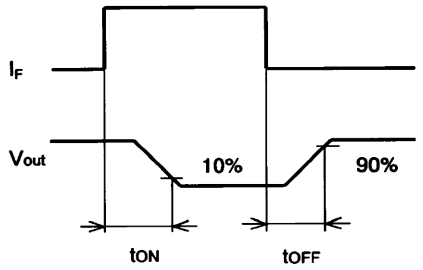

Dimensions

Unit: mm

■ PCB Through-Hole Models

G3VM-2, G3VM-2L, G3VM-351A, G3VM-353A, G3VM-401A, G3VM-61A, G3VM-61A1

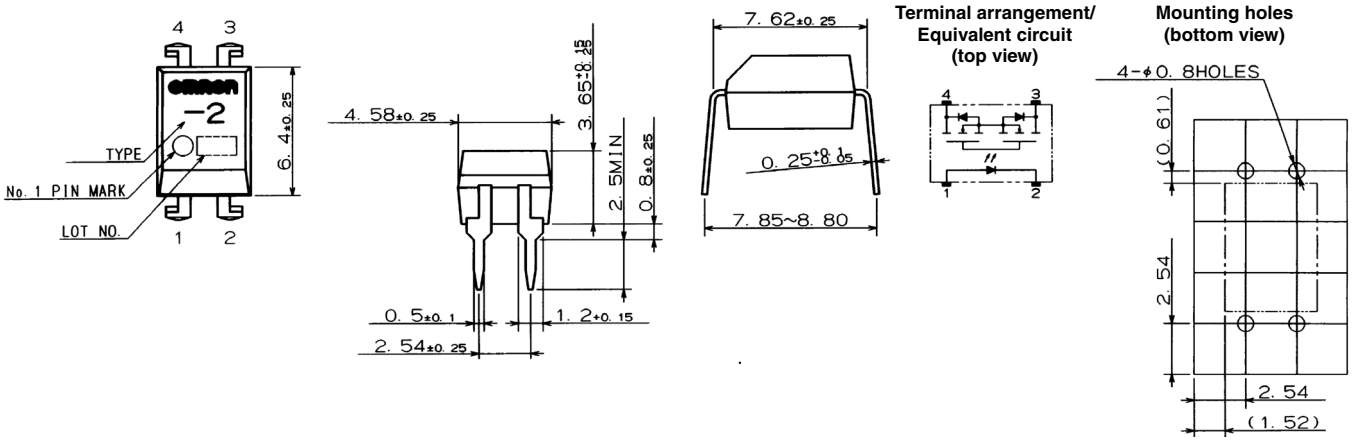

G3VM-351B, G3VM-353B, G3VM-3, G3VM-3L, G3VM-401B, G3VM-401BY, G3VM-601BY, G3VM-61B, G3VM-61B1, G3VM-V

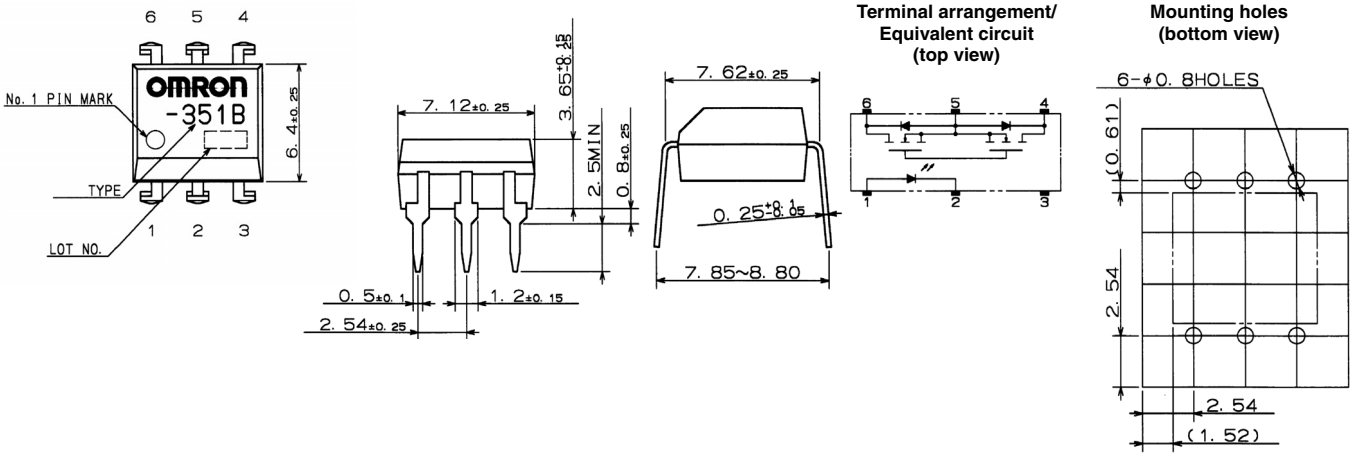

G3VM-61CP

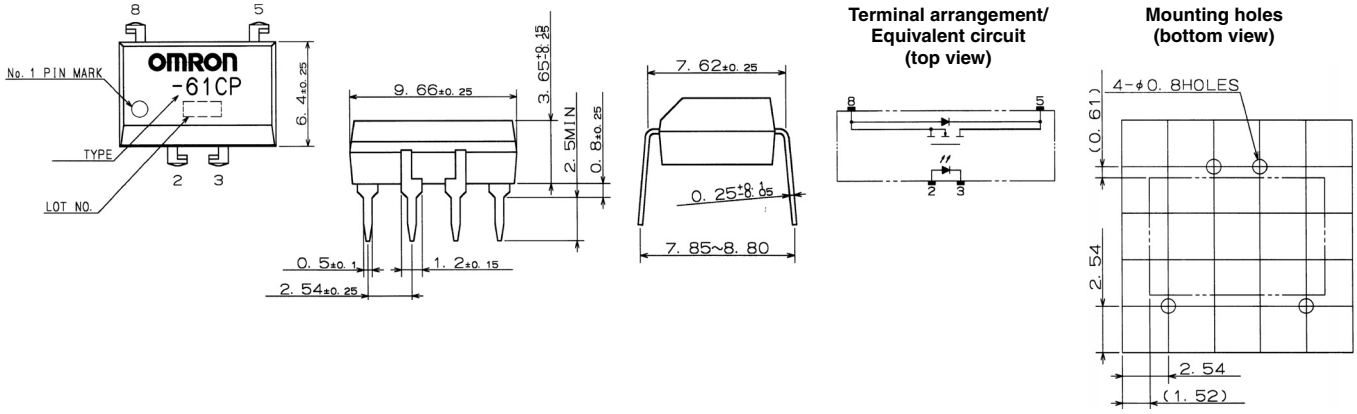

G3VM-61CR

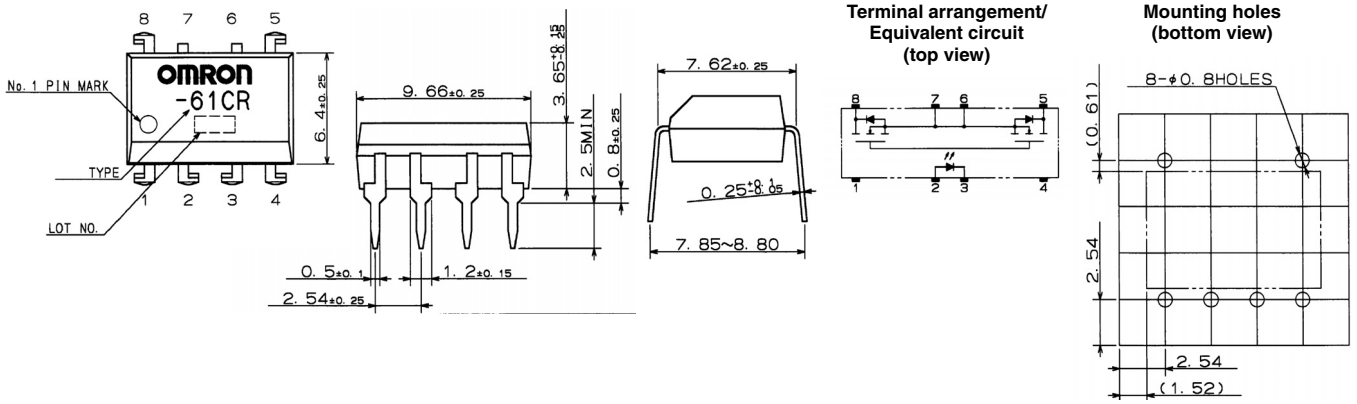

G3VM-355CR, G3VM-352C, G3VM-402C, G3VM-62C1, G3VM-W, G3VM-WL, G3VM-354C

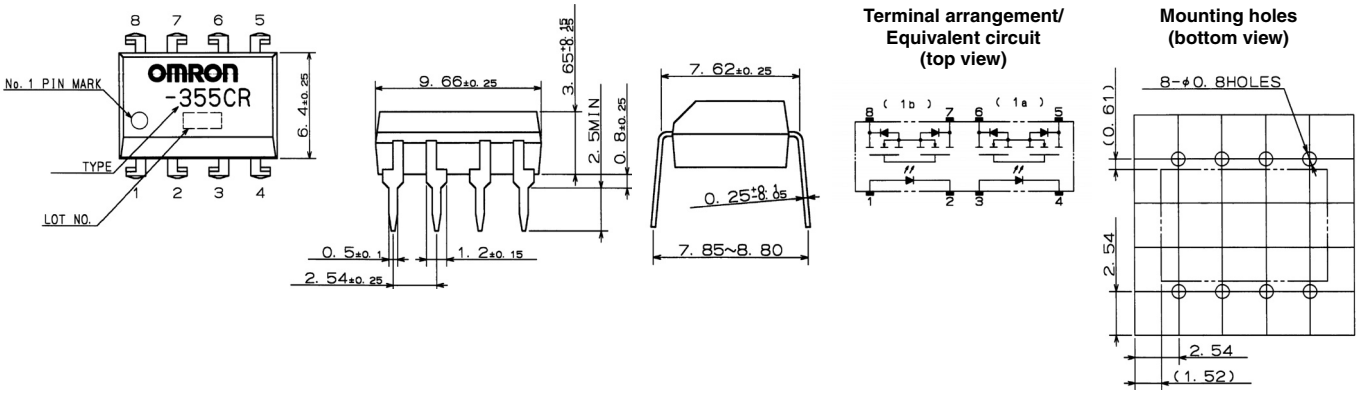

■ Surface Mount (SMT) Models

Dimensions also apply to SMT models with (TR) suffix indicating tape-and-reel packaging.

G3VM-2F, G3VM-2FL, G3VM-351D, G3VM-353D, G3VM-401D, G3VM-61D, G3VM-61D1

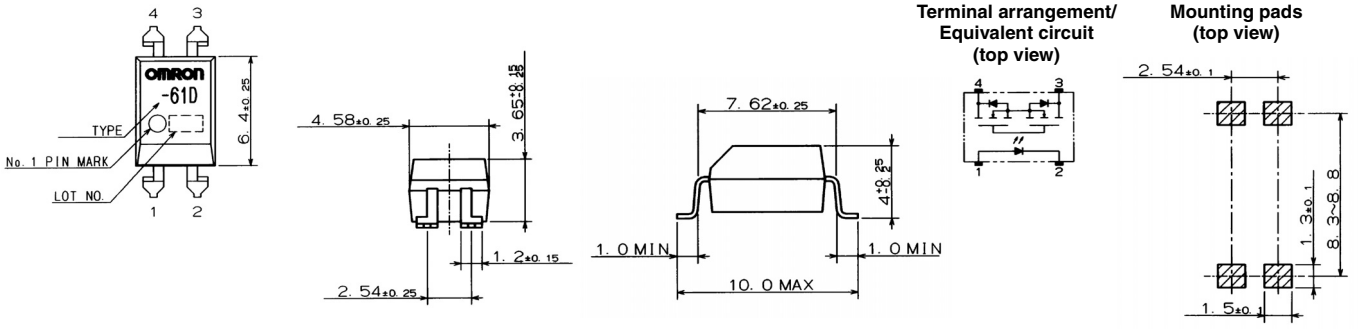

G3VM-351E, G3VM-353E, G3VM-3F, G3VM-3FL, G3VM-401E, G3VM-401EY, G3VM-601EY, G3VM-61E, G3VM-61E1, G3VM-VF

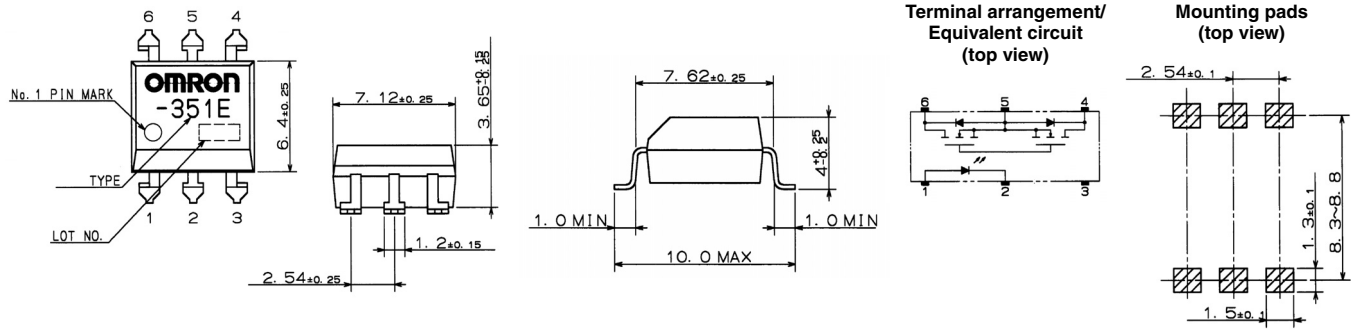

G3VM-22FO, G3VM-61FR

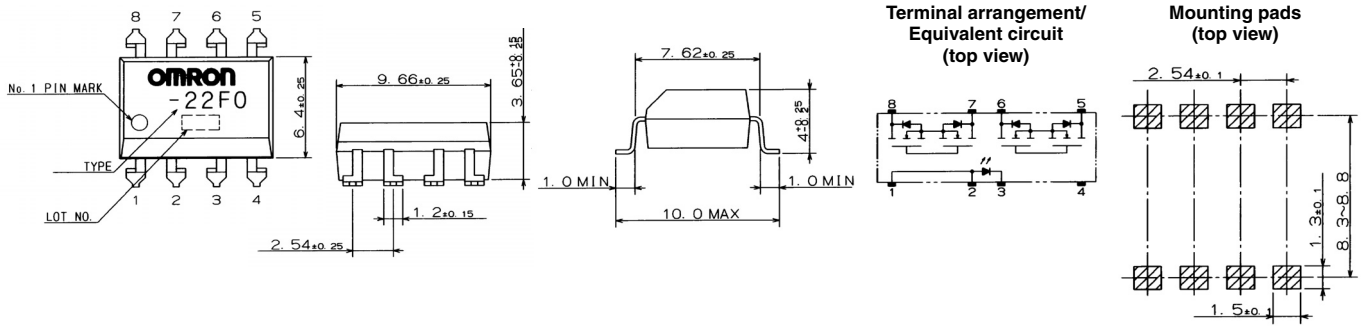

G3VM-61FP

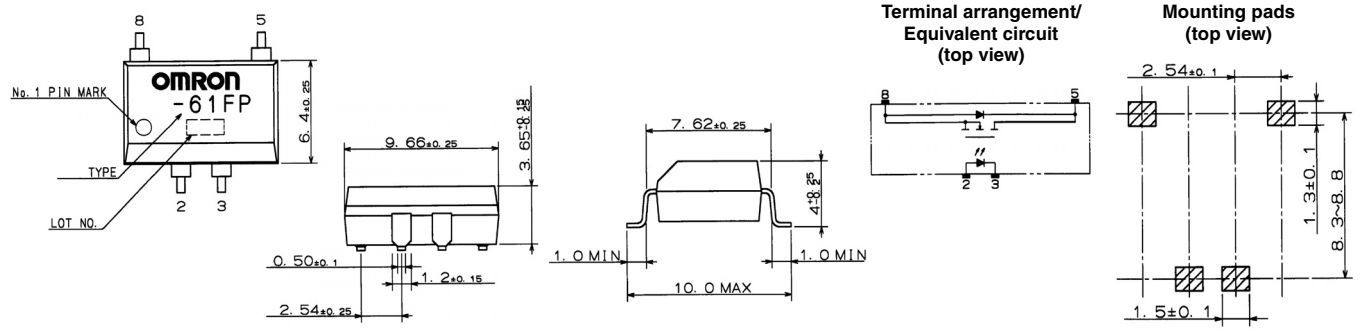

G3VM-355FR, G3VM-352F, G3VM-402F, G3VM-62F1, G3VM-WF, G3VM-WFL, G3VM-354F

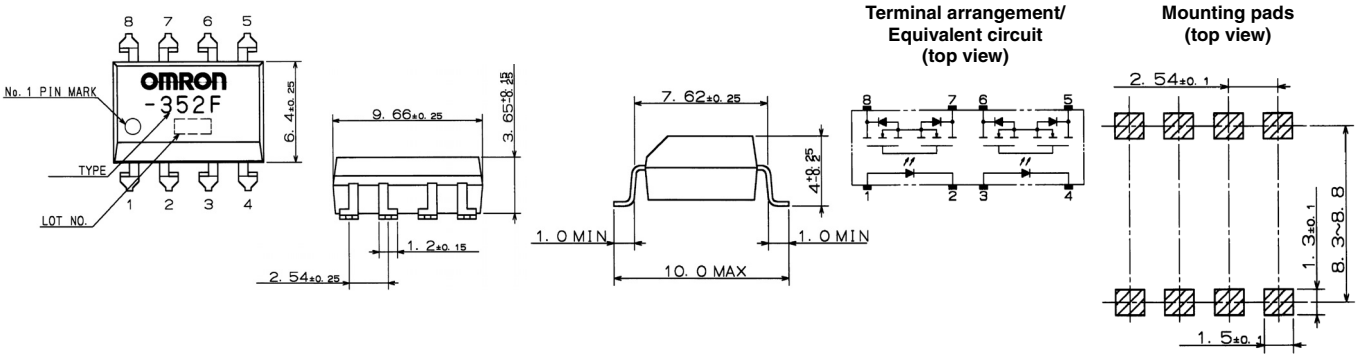

■ SOP Models

Dimensions also apply to SOP models with (TR) suffix indicating tape-and-reel packaging.

G3VM-21GR, G3VM-21GR1, G3VM-351G, G3VM-353G, G3VM-401G, G3VM-41GR3, G3VM-41GR4, G3VM-41GR5, G3VM-41GR6, G3VM-61G1, G3VM-81G1, G3VM-S1, G3VM-S2, G3VM-S5

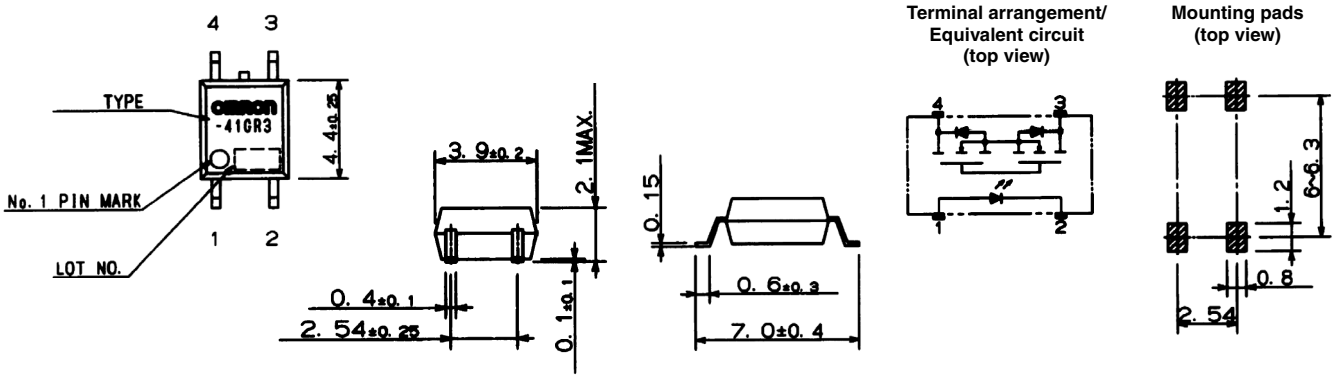

G3VM-351H, G3VM-353H, G3VM-61H1, G3VM-81HR, G3VM-S3

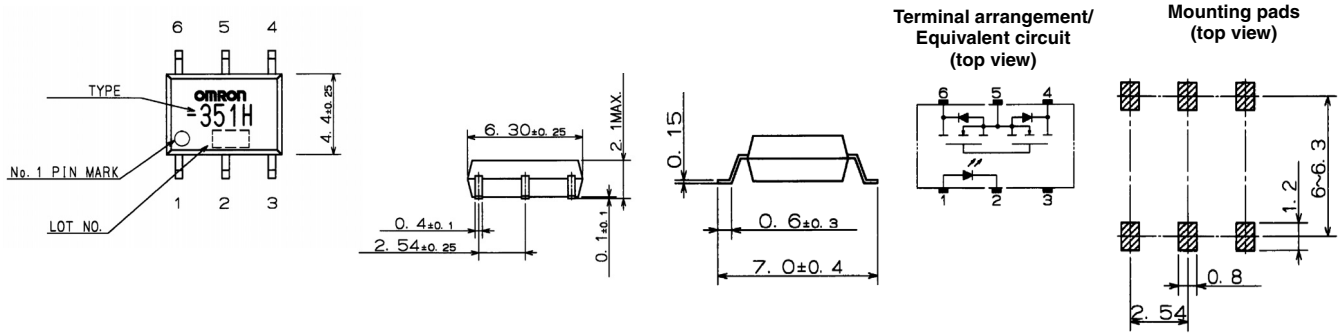

G3VM-352J, G3VM-354J, G3VM-355JR, G3VM-402J, G3VM-62J1, G3VM-SW, G3VM-SY

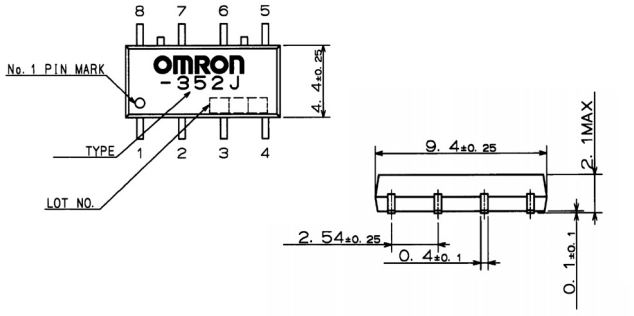

Terminal arrangement/ Equivalent circuit (top view)

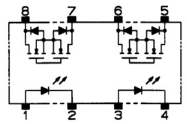

Mounting pads (top view)

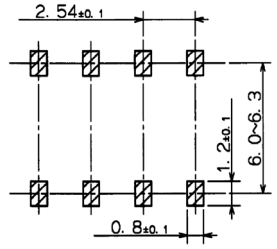

■ SSOP Models

G3VM-21LR, G3VM-21LR1, G3VM-41LR3, G3VM-41LR4, G3VM-41LR5, G3VM-41R6

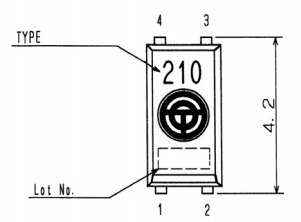

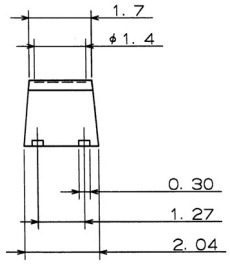

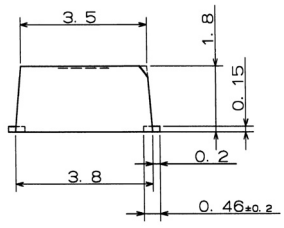

Terminal arrangement/ Equivalent circuit (top view)

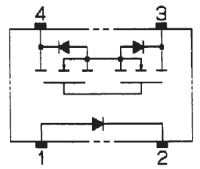

Mounting pads (top view)

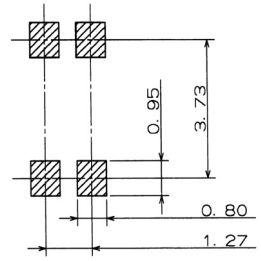

Tolerance: ±0.1 mm

Tape-and-Reel Dimensions

Unit: mm

■ Surface Mount (SMT) Models

G3VM-2F(TR), G3VM-2FL(TR), G3VM-351D(TR), G3VM-353D(TR), G3VM-401D(TR), G3VM-61D(TR), G3VM-61D1(TR)

Type Figuration

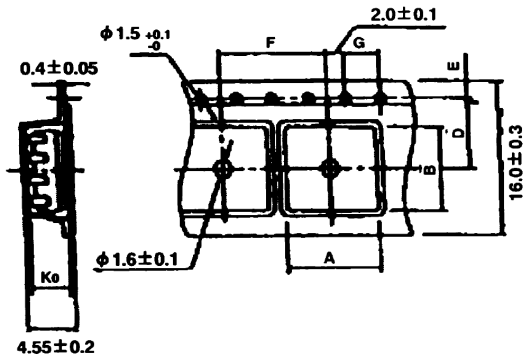

(Unit: mm)
Tolerance: ±0.1

Symbol	Dimension	Remarks
A	10.4	—
B	7.6	—
K0	4.1	Internal
F	12.0	Total Height $^{+0.1}_{-0.3}$ / 10 pitches
G	4.0	Total Height $^{+0.1}_{-0.3}$ / 10 pitches
E	1.75	From the edge to reel hole
D	12.0	From reel hole to center

Reel Figuration

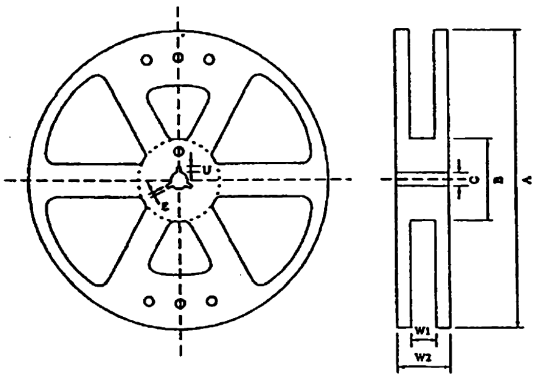

(Unit: mm)

Symbol	Dimension
A	φ 380 ± 2.0
W1	17.5 ± 0.5
W2	21.5 ± 1.0
B	φ 80 ± 1.0
C	φ 13 ± 0.5
E	2.0 ± 0.5
U	4.0 ± 0.5

G3VM-351E(TR), G3VM-353E(TR), G3VM-3F(TR), G3VM-3FL(TR), G3VM-401E(TR), G3VM-401EY(TR), G3VM-601EY(TR), G3VM-61E(TR), G3VM-61E1(TR), G3VM-VF(TR), G3VM-22FO(TR), G3VM-61FP(TR), G3VM-61FR(TR), G3VM-355FR(TR), G3VM-352F(TR), G3VM-402F(TR), G3VM-62F1(TR), G3VM-WF(TR), G3VM-WFL(TR), G3VM-354F(TR)

Type Figuration

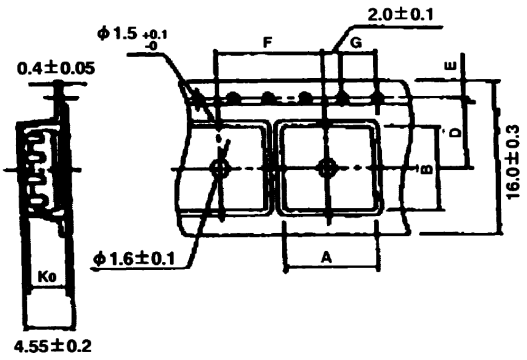

(Unit: mm)
Tolerance: ±0.1

Symbol	Dimension	Remarks
A	10.4 ± 0.1	—
B	10.1 ± 0.1	—
K0	4.1 ± 0.1	Internal
F	12.0 ± 0.1	Total Height $^{+0.1}_{-0.3}$ / 10 pitches
G	4.0 ± 0.1	Total Height $^{+0.1}_{-0.3}$ / 10 pitches
E	1.75 ± 0.1	From the edge to reel hole
D	7.5 ± 0.1	From reel hole to center

Reel Figuration

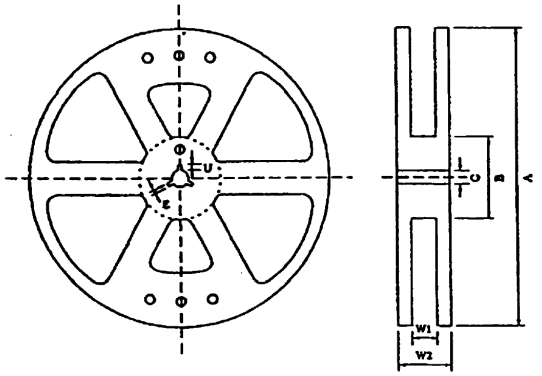

(Unit: mm)

Symbol	Dimension
A	φ 380 ± 2.0
W1	17.5 ± 0.5
W2	21.5 ± 1.0
B	φ 80 ± 1.0
C	φ 13 ± 0.5
E	2.0 ± 0.5
U	4.0 ± 0.5

■ SOP Models

G3VM-21GR(TR), G3VM-21GR1(TR), G3VM-351G(TR), G3VM-353G(TR), G3VM-401G(TR), G3VM-41GR3(TR), G3VM-41GR4(TR), G3VM-41GR5(TR), G3VM-41GR6(TR), G3VM-61G1(TR), G3VM-81G1(TR), G3VM-S1(TR), G3VM-S2(TR), G3VM-S5(TR)

Type Figuration

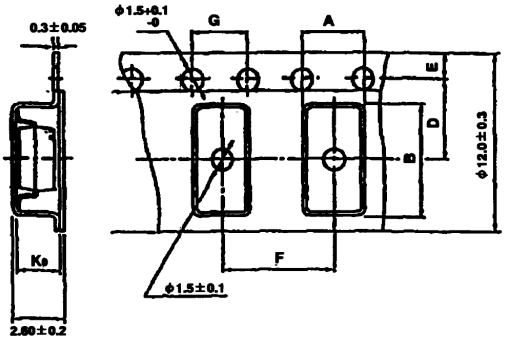

(Unit: mm)
Tolerance: ±0.1

Symbol	Dimension	Remarks
A	4.3 ± 0.1	—
B	7.5 ± 0.1	—
K0	2.4 ± 0.1	Internal
F	8.0 ± 0.1	Total Height $^{+0.1}_{-0.3}$ / 10 pitches
G	4.0 ± 0.1	Total Height $^{+0.1}_{-0.3}$ / 10 pitches
E	1.75 ± 0.1	From the edge to reel hole
D	5.5 ± 0.1	From reel hole to center

Reel Figuration

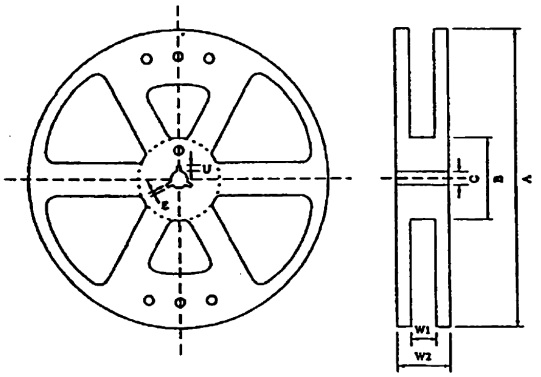

(Unit: mm)

Symbol	Dimension
A	φ 380 ± 2.0
W1	17.5 ± 0.5
W2	21.5 ± 1.0
B	φ 80 ± 1.0
C	φ 13 ± 0.5
E	2.0 ± 0.5
U	4.0 ± 0.5

G3VM-351H(TR), G3VM-353H(TR), G3VM-61H1(TR), G3VM-81HR(TR), G3VM-S3(TR)

Type Figuration

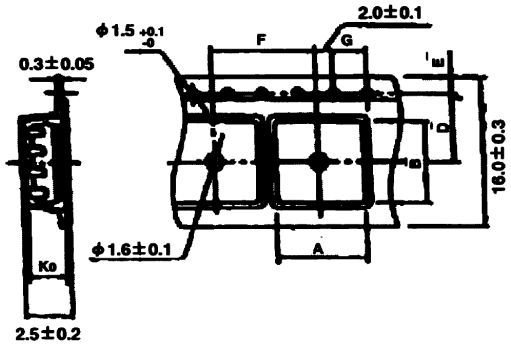

(Unit: mm)
Tolerance: ±0.1

Symbol	Dimension	Remarks
A	7.5 ± 0.1	—
B	6.7 ± 0.1	—
K0	2.3 ± 0.1	Internal
F	12.0 ± 0.1	Total Height $^{+0.1}_{-0.3}$ / 10 pitches
G	4.0 ± 0.1	Total Height $^{+0.1}_{-0.3}$ / 10 pitches
E	1.75 ± 0.1	From the edge to reel hole
D	7.5 ± 0.1	From reel hole to center

Reel Figuration

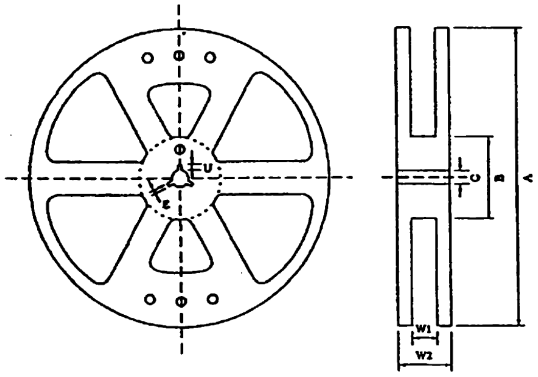

(Unit: mm)

Symbol	Dimension
A	φ 380 ± 2.0
W1	17.5 ± 0.5
W2	21.5 ± 1.0
B	φ 80 ± 1.0
C	φ 13 ± 0.5
E	2.0 ± 0.5
U	4.0 ± 0.5

G3VM-352J(TR), G3VM-354J(TR), G3VM-355JR(TR), G3VM-402J(TR), G3VM-62J1(TR), G3VM-SW(TR), G3VM-SY(TR)

Type Figuration

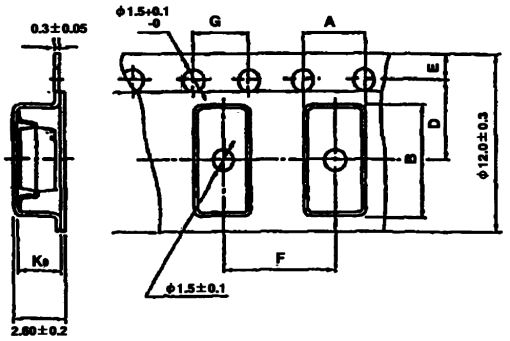

(Unit: mm)
Tolerance: ±0.1

Symbol	Dimension	Remarks
A	7.5 ± 0.1	—
B	10.5 ± 0.1	—
K0	2.2 ± 0.1	Internal
F	12.0 ± 0.1	Total Height $^{+0.1}_{-0.3}$ / 10 pitches
G	4.0 ± 0.1	Total Height $^{+0.1}_{-0.3}$ / 10 pitches
E	1.75 ± 0.1	From the edge to reel hole
D	7.5 ± 0.1	From reel hole to center

Reel Figuration

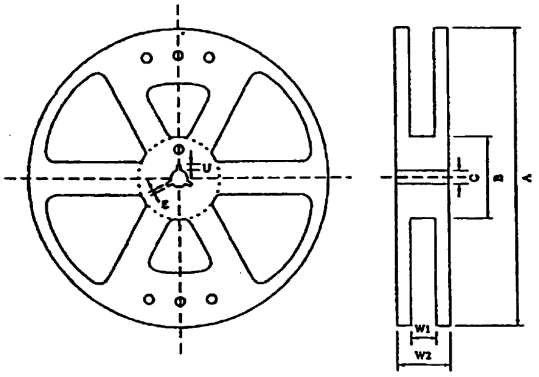

(Unit: mm)

Symbol	Dimension
A	φ 380 ± 2.0
W1	17.5 ± 0.5
W2	21.5 ± 1.0
B	φ 80 ± 1.0
C	φ 13 ± 0.5
E	2.0 ± 0.5
U	4.0 ± 0.5

■ SSOP Models

G3VM-21LR, G3VM-21LR1, G3VM-41LR3, G3VM-41LR4, G3VM-41LR5, G3VM-41R6

Type Figuration

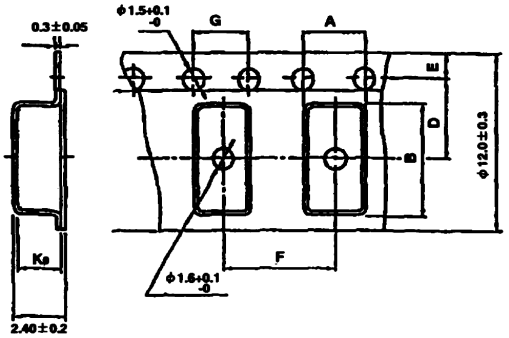

(Unit: mm)
Tolerance: ±0.1

Symbol	Dimension	Remarks
A	2.35 ± 0.1	—
B	4.5 ± 0.1	—
K0	2.1 ± 0.1	Internal
F	4.0 ± 0.1	Total Height $^{+0.1}_{-0.3}$ / 10 pitches
G	4.0 ± 0.1	Total Height $^{+0.1}_{-0.3}$ / 10 pitches
E	1.75 ± 0.1	From the edge to reel hole
D	5.5 ± 0.1	From reel hole to center

Reel Figuration

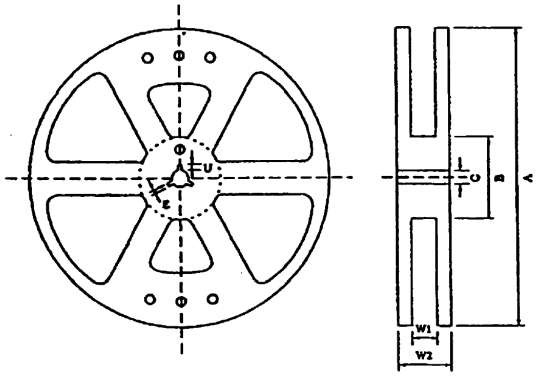

(Unit: mm)

Symbol	Dimension
A	φ 380 ± 2.0
W1	17.5 ± 0.5
W2	21.5 ± 1.0
B	φ 80 ± 1.0
C	φ 13 ± 0.5
E	2.0 ± 0.5
U	4.0 ± 0.5

Precautions

⚠ WARNING

Always turn the power off before wiring, or an electric shock may occur.

Do not touch the SSR terminal section (the recharge section) while the power supply is connected. Contact with the recharge section will result in an electric shock.

⚠ Caution

Do not use excess voltage or current in the SSR input or output circuits. Otherwise, damage to the SSR or a fire will result.

Conduct wiring and soldering correctly according to soldering conditions. If the product is used with incomplete wiring, overheating will occur and may result in a fire.

■ Reflow Solder Conditions

G3VM relays are designed to withstand a maximum soldering temperature of 260°C for 10 seconds.

■ Typical Relay Driving Circuit Examples

C-MOS

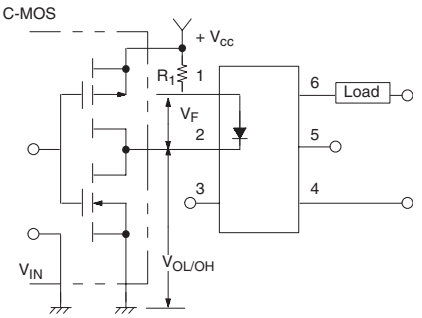

Transistor

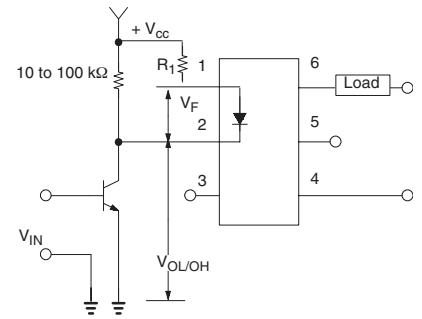

Use the following formula to obtain the LED current limiting resistance value to assure that the Relay operates accurately.

$$R_1 = \frac{V_{CC} - V_{OL} - V_F(ON)}{5 \text{ to } 20 \text{ mA}}$$

Use the following formula to obtain the LED forward voltage value to assure that the Relay releases accurately.

$$V_{F\,(OFF)} = V_{CC} - V_{OH} < 0.8 \text{ V}$$

■ Protection from Surge Voltage on the Input Terminals

If any reversed surge voltage is imposed on the input terminals, insert a diode in parallel to the input terminals as shown in the following circuit diagram and do not impose a reversed voltage value of 3 V or more.

Spike Voltage Protection Circuit Example

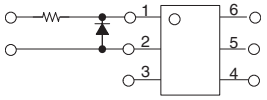

■ Protection from Spike Voltage on the Output Terminals

If a spike voltage exceeding the absolute maximum rated value is generated between the output terminals, insert a C-R snubber or clamping diode in parallel to the load as shown in the following circuit diagram to limit the spike voltage.

Spike Voltage Protection Circuit Example

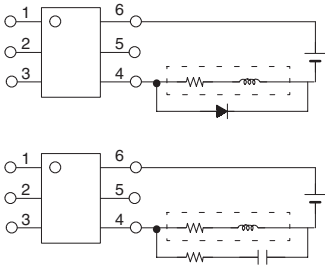

■ Unused Terminals

Terminal 3 is connected to the internal circuit. Do not connect anything to terminal 3 externally.

■ Relay Holding Force for Automatic Mounting

A Relay must not be imposed with a force exceeding 200 gf (1.96 N) in the A or B direction shown in the following illustration when the Relay is mounted automatically, or the characteristics of the Relay may change.

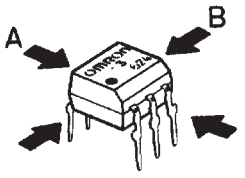

■ Load Connection

Do not short-circuit the input and output terminals while the Relay is operating or the Relay may malfunction.

AC Connection

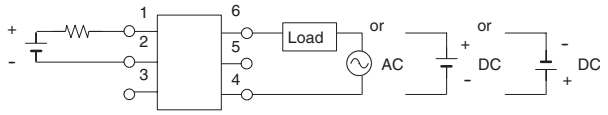

DC Single Connection

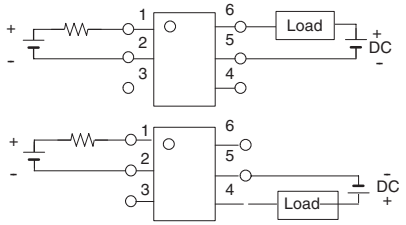

DC Parallel Connection

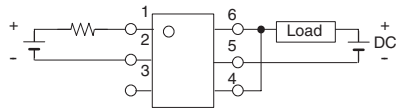

Certain Terms and Conditions of Sale

1. Offer; Acceptance. These terms and conditions (these "Terms") are deemed part of all catalogs, manuals or other documents, whether electronic or in writing, relating to the sale of goods or services (collectively, the "Goods") by Omron Electronic Components LLC and its subsidiary companies ("Seller"). Seller hereby objects to any terms or conditions proposed in Buyer's purchase order or other documents which are inconsistent with, or in addition to, these Terms. Please contact your Omron representative to confirm any additional terms for sales from your Omron company.
2. Prices. All prices stated are current, subject to change without notice by Seller. Buyer agrees to pay the price in effect at time of shipment.
3. Discounts. Cash discounts, if any, will apply only on the net amount of invoices sent to Buyer after deducting transportation charges, taxes and duties, and will be allowed only if (i) the invoice is paid according to Seller's payment terms and (ii) Buyer has no past due amounts owing to Seller.
4. Orders. Seller will accept no order less than $200 net billing.
5. Governmental Approvals. Buyer shall be responsible for, and shall bear all costs involved in, obtaining any government approvals required for the importation or sale of the Goods.
6. Taxes. All taxes, duties and other governmental charges (other than general real property and income taxes), including any interest or penalties thereon, imposed directly or indirectly on Seller or required to be collected directly or indirectly by Seller for the manufacture, production, sale, delivery, importation, consumption or use of the Goods sold hereunder (including customs duties and sales, excise, use, turnover and license taxes) shall be charged to and remitted by Buyer to Seller.
7. Financial. If the financial position of Buyer at any time becomes unsatisfactory to Seller, Seller reserves the right to stop shipments or require satisfactory security or payment in advance. If Buyer fails to make payment or otherwise comply with these Terms or any related agreement, Seller may (without liability and in addition to other remedies) cancel any unshipped portion of Goods sold hereunder and stop any Goods in transit until Buyer pays all amounts, including amounts payable hereunder, whether or not then due, which are owing to it by Buyer. Buyer shall in any event remain liable for all unpaid accounts.
8. Cancellation; Etc. Orders are not subject to rescheduling or cancellation unless Buyer indemnifies Seller fully against all costs or expenses arising in connection therewith.
9. Force Majeure. Seller shall not be liable for any delay or failure in delivery resulting from causes beyond its control, including earthquakes, fires, floods, strikes or other labor disputes, shortage of labor or materials, accidents to machinery, acts of sabotage, riots, delay in or lack of transportation or the requirements of any government authority.
10. Shipping; Delivery. Unless otherwise expressly agreed in writing by Seller:
    a. Shipments shall be by a carrier selected by Seller;
    b. Such carrier shall act as the agent of Buyer and delivery to such carrier shall constitute delivery to Buyer;
    c. All sales and shipments of Goods shall be FOB shipping point (unless otherwise stated in writing by Seller), at which point title to and all risk of loss of the Goods shall pass from Seller to Buyer, provided that Seller shall retain a security interest in the Goods until the full purchase price is paid by Buyer;
    d. Delivery and shipping dates are estimates only.
    e. Seller will package Goods as it deems proper for protection against normal handling and extra charges apply to special conditions.
11. Claims. Any claim by Buyer against Seller for shortage or damage to the Goods occurring before delivery to the carrier must be presented in writing to Seller within 30 days of receipt of shipment and include the original transportation bill signed by the carrier noting that the carrier received the Goods from Seller in the condition claimed.
12. Warranties. (a) Exclusive Warranty. Seller's exclusive warranty is that the Goods will be free from defects in materials and workmanship for a period of twelve months from the date of sale by Seller (or such other period expressed in writing by Seller). Seller disclaims all other warranties, express or implied. (b) Limitations. SELLER MAKES NO WARRANTY OR REPRESENTATION, EXPRESS OR IMPLIED, ABOUT NON-INFRINGEMENT, MERCHANTABILITY OR FITNESS FOR A PARTICULAR PURPOSE OF THE GOODS. BUYER ACKNOWLEDGES THAT IT ALONE HAS DETERMINED THAT THE GOODS WILL SUITABLY MEET THE REQUIREMENTS OF THEIR INTENDED USE. Seller further disclaims all warranties and responsibility of any type for claims or expenses based on infringement by the Goods or otherwise of any intellectual property right. (c) Buyer Remedy. Seller's sole obligation hereunder shall be to replace (in the form originally shipped with Buyer responsible for labor charges for removal or replacement thereof) the non-complying Good or, at Seller's election, to repay or credit Buyer an amount equal to the purchase price of the Good; provided that in no event shall Seller be responsible for warranty, repair, indemnity or any other claims or expenses regarding the Goods unless Seller's analysis confirms that the Goods were properly handled, stored, installed and maintained and not subject to contamination, abuse, misuse or inappropriate modification. Return of any goods by Buyer must be approved in writing by Seller before shipment. Seller shall not be liable for the suitability or unsuitability or the results from the use of Goods in combination with any electrical or electronic components, circuits, system assemblies or any other materials or substances or environments. Any advice, recommendations or information given orally or in writing, are not to be construed as an amendment or addition to the above warranty.
13. Damage Limits; Etc. SELLER SHALL NOT BE LIABLE FOR SPECIAL, INDIRECT OR CONSEQUENTIAL DAMAGES, LOSS OF PROFITS OR PRODUCTION OR COMMERCIAL LOSS IN ANY WAY CONNECTED WITH THE GOODS, WHETHER SUCH CLAIM IS BASED IN CONTRACT, WARRANTY, NEGLIGENCE OR STRICT LIABILITY. Further, in no event shall liability of Seller exceed the individual price of the Good on which liability is asserted.
14. Indemnities. Buyer shall indemnify and hold harmless Seller, its affiliates and its employees from and against all liabilities, losses, claims, costs and expenses (including attorney's fees and expenses) related to any claim, investigation, litigation or proceeding (whether or not Seller is a party) which arises or is alleged to arise from Buyer's acts or omissions under these Terms or in any way with respect to the Goods. Without limiting the foregoing, Buyer (at its own expense) shall indemnify and hold harmless Seller and defend or settle any action brought against Seller to the extent that it is based on a claim that any Good made to Buyer specifications infringed intellectual property rights of another party.
15. Property; Confidentiality. The intellectual property embodied in the Goods is the exclusive property of Seller and its affiliates and Buyer shall not attempt to duplicate it in any way without the written permission of Seller. Notwithstanding any charges to Buyer for engineering or tooling, all engineering and tooling shall remain the exclusive property of Seller. All information and materials supplied by Seller to Buyer relating to the Goods are confidential and proprietary, and Buyer shall limit distribution thereof to its trusted employees and strictly prevent disclosure to any third party.
16. Miscellaneous. (a) Waiver. No failure or delay by Seller in exercising any right and no course of dealing between Buyer and Seller shall operate as a waiver of rights by Seller. (b) Assignment. Buyer may not assign its rights hereunder without Seller's written consent. (c) Amendment. These Terms constitute the entire agreement between Buyer and Seller relating to the Goods, and no provision may be changed or waived unless in writing signed by the parties. (d) Severability. If any provision hereof is rendered ineffective or invalid, such provision shall not invalidate any other provision. (e) Setoff. Buyer shall have no right to set off any amounts against the amount owing in respect of this invoice. (f) As used herein, "including" means "including without limitation".

Certain Precautions on Specifications and Use

1. Suitability of Use. Seller shall not be responsible for conformity with any standards, codes or regulations which apply to the combination of the Good in the Buyer's application or use of the Good. At Buyer's request, Seller will provide applicable third party certification documents identifying ratings and limitations of use which apply to the Good. This information by itself is not sufficient for a complete determination of the suitability of the Good in combination with the end product, machine, system, or other application or use. The following are some examples of applications for which particular attention must be given. This is not intended to be an exhaustive list of all possible uses of this Good, nor is it intended to imply that the uses listed may be suitable for this Good:
   (i) Outdoor use, uses involving potential chemical contamination or electrical interference, or conditions or uses not described in this document.
   (ii) Energy control systems, combustion systems, railroad systems, aviation systems, medical equipment, amusement machines, vehicles, safety equipment, and installations subject to separate industry or government regulations.
   (iii) Systems, machines and equipment that could present a risk to life or property. Please know and observe all prohibitions of use applicable to this Good.

   NEVER USE THE PRODUCT FOR AN APPLICATION INVOLVING SERIOUS RISK TO LIFE OR PROPERTY WITHOUT ENSURING THAT THE SYSTEM AS A WHOLE HAS BEEN DESIGNED TO ADDRESS THE RISKS, AND THAT THE SELLER'S PRODUCT IS PROPERLY RATED AND INSTALLED FOR THE INTENDED USE WITHIN THE OVERALL EQUIPMENT OR SYSTEM.
2. Programmable Products. Seller shall not be responsible for the user's programming of a programmable Good, or any consequence thereof.
3. Performance Data. Performance data given in this catalog is provided as a guide for the user in determining suitability and does not constitute a warranty. It may represent the result of Seller's test conditions, and the user must correlate it to actual application requirements. Actual performance is subject to the Seller's Warranty and Limitations of Liability.
4. Change in Specifications. Product specifications and accessories may be changed at any time based on improvements and other reasons. It is our practice to change part numbers when published ratings or features are changed, or when significant construction changes are made. However, some specifications of the Good may be changed without any notice. When in doubt, special part numbers may be assigned to fix or establish key specifications for your application. Please consult with your Seller's representative at any time to confirm actual specifications of purchased Good.
5. Errors and Omissions. The information in this catalog has been carefully checked and is believed to be accurate; however, no responsibility is assumed for clerical, typographical or proofreading errors, or omissions.

Complete "Terms and Conditions of Sale" for product purchase and use are on Omron's website at www.omron.com/oei – under the "About Us" tab, in the Legal Matters section.

ALL DIMENSIONS SHOWN ARE IN MILLIMETERS.
To convert millimeters into inches, multiply by 0.03937. To convert grams into ounces, multiply by 0.03527.

OMRON

OMRON ELECTRONIC COMPONENTS LLC
55 E. Commerce Drive, Suite B
Schaumburg, IL 60173
847-882-2288

OMRON CANADA, INC.
885 Milner Avenue
Toronto, Ontario M1B 5V8
416-286-6465

OMRON ON-LINE
Global - http://www.omron.com
USA - http://www.omron.com/oei
Canada - http://www.omron.ca

Cat. No. GC RLY8A 8/04 Specifications subject to change without notice Printed in USA