Inductive sensor
NI15-G30-Y1X

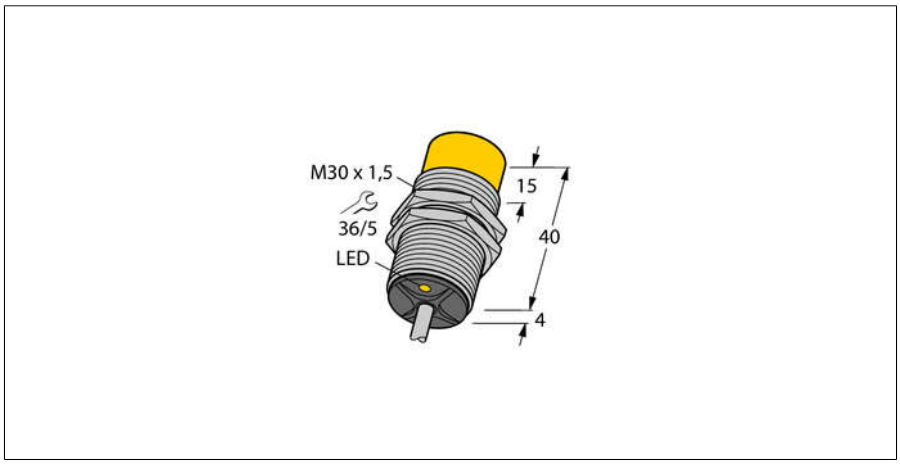

- **ATEX category II 1 G, Ex zone 0**
- **ATEX category II 1 D, Ex zone 20**
- **SIL2 as per IEC 61508**
- **Threaded barrel, M30 x 1.5**
- **Chrome-plated brass**
- **DC 2-wire, nom. 8.2 VDC**
- **Output acc. to DIN EN 60947-5-6 (NAMUR)**
- **Cable connection**

Wiring diagram

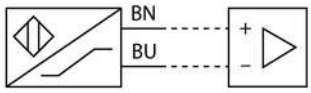

Type code	NI15-G30-Y1X
Ident no.	40201
Rated operating distance Sn	15 mm
Mounting condition	non-flush
Assured switching distance	≤ (0,81 x Sn) mm
Correction factors	St37 = 1; Al = 0.3; stainless steel = 0.7; Ms = 0.4
Repeatability	≤ 2 % of full scale
Temperature drift	10 %
Hysteresis	1…10 %
Ambient temperature	-25…+70 °C
Output function	2-wire, NAMUR
Switching frequency	0.2 kHz
Voltage	Nom. 8.2 VDC
Non-actuated current consumption	≥ 2.1 mA
Actuated current consumption	≤ 1.2 mA
Approval acc. to	KEMA 02 ATEX 1090X
Internal capacitance (C_i) / inductance (L_i)	150 nF / 150 µH
Device designation	Ⓔx II 1 G Ex ia IIC T6 Ga/II 1 D Ex ia IIIC T115 °C Da (max. U_i = 20 V, I_i = 20 mA, P_i = 200 mW)
Design	threaded barrel, M30 x 1.5
Dimensions	44 mm
Housing material	metal, CuZn, chrome-plated
Material active area	Plastic, PA
End cap	Plastic, EPTR
Max. tightening torque housing nut	75 Nm
Connection	cable
Cable quality	5.2 mm, blue, LiYY, PVC, 2m
Cable cross section	2 x 0.5 mm^2
Vibration resistance	55 Hz (1 mm)
Shock resistance	30 g (11 ms)
Protection class	IP67
MTTF	6198 years acc. to SN 29500 (Ed.99) 40 °C
Switching state	LED yellow

Functional principle

Inductive sensors detect metal objects contactless and wear-free. For this, they use a high-frequency electromagnetic AC field that interacts with the target. Inductive sensors generate this field via an RLC circuit with a ferrite coil.

We offer special versions for temperatures of -60 °C up to +250 °C.

Edition • 2014-05-16T12:09:21+02:00

Distance D	3 x B
Distance W	3 x Sn
Distance T	3 x B
Distance S	1.5 x B
Distance G	6 x Sn
Distance N	20 mm

Diameter of the active area B	Ø 30 mm

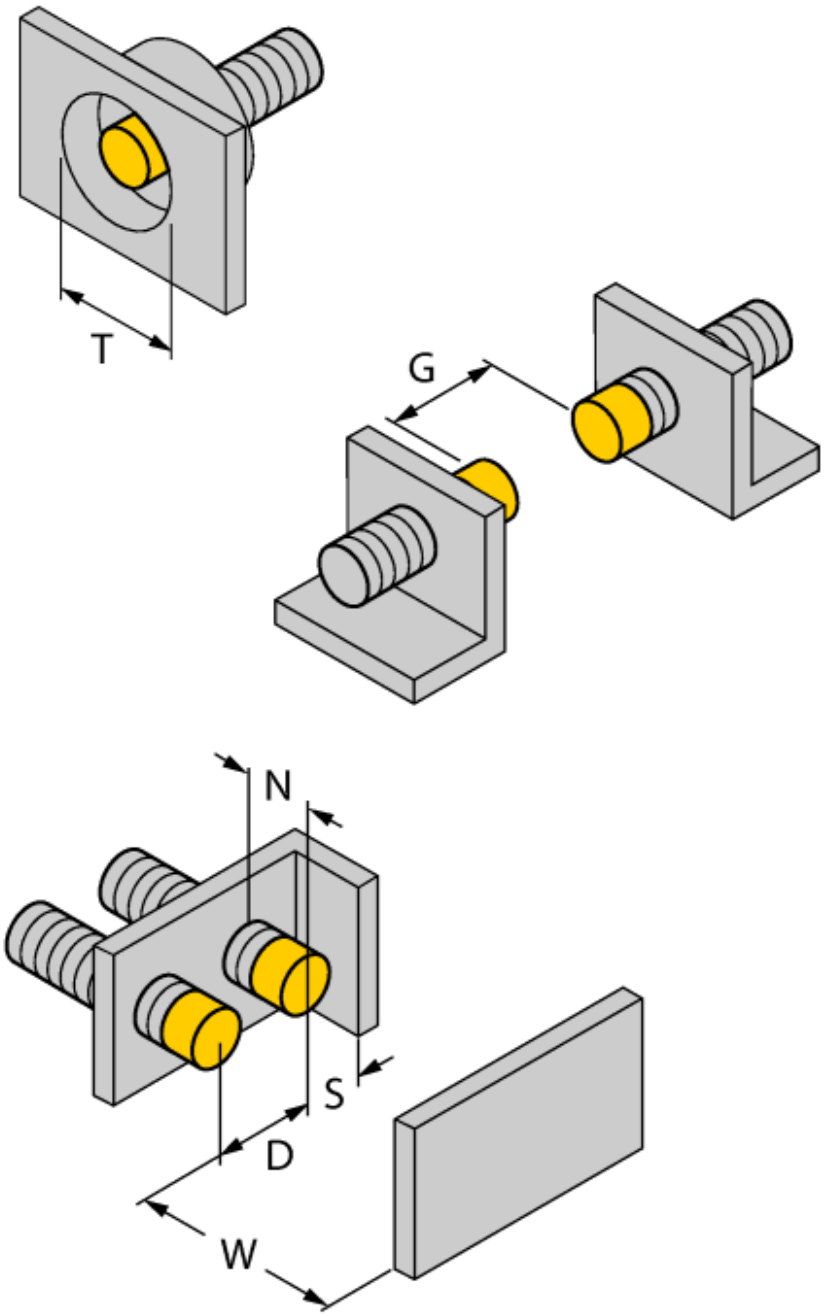

Edition • 2014-05-16T12:09:21+02:00

Accessories

Type code	Ident no.	Description	Dimension drawing
IM1-22EX-R	7541231	Isolating switching amplifier, dual-channel; 2 relay outputs NO; input NAMUR signal; selectable ON/OFF mode for wire-break and short-circuit monitoring; adjustable signal flow (NO/ NC mode); removable terminal blocks; 18 mm width; universal voltage supply unit	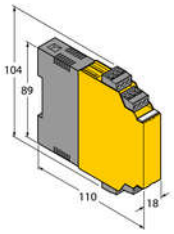
QM-30	6945103	Quick-mount bracket with dead-stop; material: Chrome-plated brass Male thread M36 x 1.5. Note: The switching distance of proximity switches can be reduced by the use of quick-mount brackets.	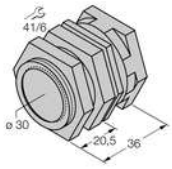
BST-30B	6947216	Fixing clamp for threaded barrel devices, with dead-stop; material: PA6	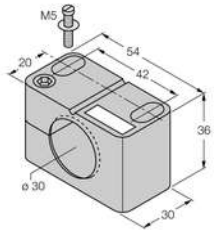
MW-30	6945005	Mounting bracket for threaded barrel devices; material: Stainless steel A2 1.4301 (AISI 304)	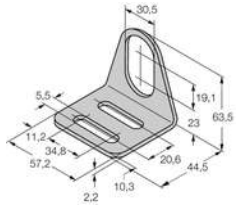
BSS-30	6901319	Mounting bracket for smooth and threaded barrel devices; material: Polypropylene	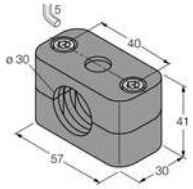

Edition • 2014-05-16T12:09:21+02:00

Operating manual

Intended use

This device fulfills the directive 94/9/EC and is suited for use in explosion hazardous areas according to EN60079-0:2012, -11:2012, -26:2007. Further it is suited for use in safety-related systems, including SIL2 as per IEC 61508.
In order to ensure correct operation to the intended purpose it is required to observe the national regulations and directives.

For use in explosion hazardous areas conform to classification

II 1 G and II 1 D (Group II, Category 1 G, electrical equipment for gaseous atmospheres and category 1 D, electrical equipment for dust atmospheres).

Marking (see device or technical data sheet)

Ⓔx II 1 G and Ex ia IIC T6 Ga acc. to EN60079-0 and -26 and Ⓔx II 1 D Ex ia IIIC T115°C Da acc. to EN60079-0

Local admissible ambient temperature

ATEX category II 2 G electrical equipment -40…+70°C, category II 1 D -25…+70 °C. The corresponding temperature classes are provided in the ATEX type-examination certificate.

Installation / Commissioning

These devices may only be installed, connected and operated by trained and qualified staff. Qualified staff must have knowledge of protection classes, directives and regulations concerning electrical equipment designed for use in explosion hazardous areas.
Please verify that the classification and the marking on the device comply with the actual application conditions.

This device is only suited for connection to approved Exi circuits compliant to EN60079-0 and -11. Please observe the maximum admissible electrical values.
After connection to other circuits the sensor may no longer be used in Exi installations. When interconnected to (associated) electrical equipment, it is required to perform the "Proof of intrinsic safety" (EN60079-14).
When employed in safety systems to IEC 51408 it is required to assess the failure probability (PFD) of the complete circuitry.

Installation and mounting instructions

Avoid static charging of cables and plastic devices. Please only clean the device with a damp cloth. Do not install the device in a dust flow and avoid build-up of dust deposits on the device.
If the devices and the cable could be subject to mechanical damage, they must be protected accordingly. They must also be shielded against strong electro-magnetic fields.
The pin configuration and the electrical specifications can be taken from the device marking or the technical data sheet.

service / maintenance

Repairs are not possible. The approval expires if the device is repaired or modified by a person other than the manufacturer. The most important data from the approval are listed.

Edition • 2014-05-16T12:09:21+02:00