THE INFORMATION CONTAINED IN THIS DRAWING IS THE SOLE PROPERTY OF L-COM, INC. ANY REPRODUCTION IN PART OR WHOLE WITHOUT THE WRITTEN PERMISSION OF L-COM, INC. IS PROHIBITED.

REVISIONS			
REV	DESCRIPTION	DATE	APPROVED
E	ECN 6910: UPDATED FORMAT, PACKAGING, LOGOS, AND ROHS	6/19/13	D. DESJARDIN
F	ECN 8679: ADDED "CGSVGAMM-1" AND UPDATED TITLE BLOCK	03/20/17	J.LABOY

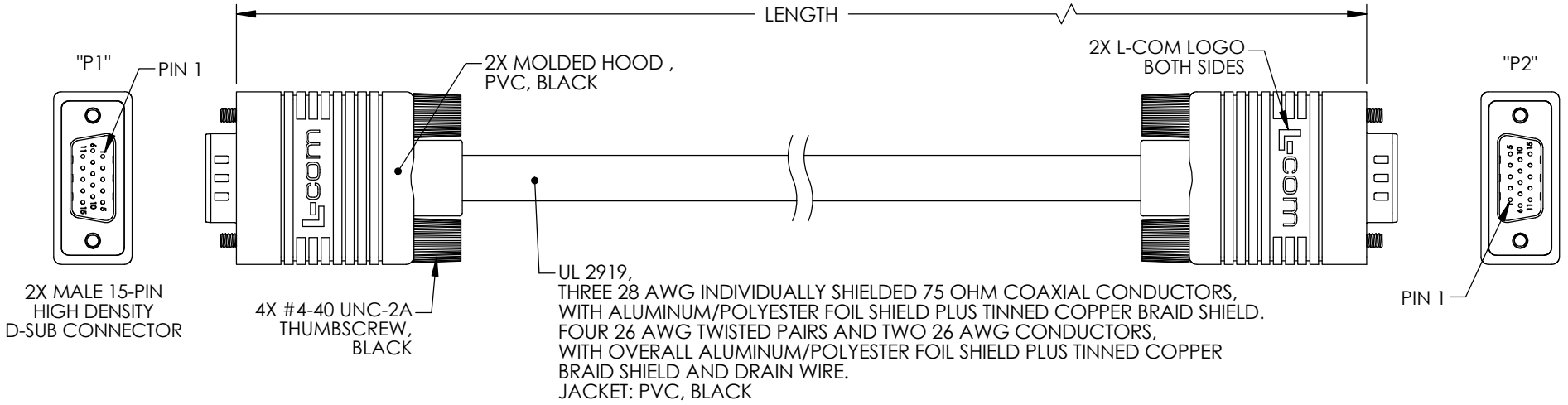

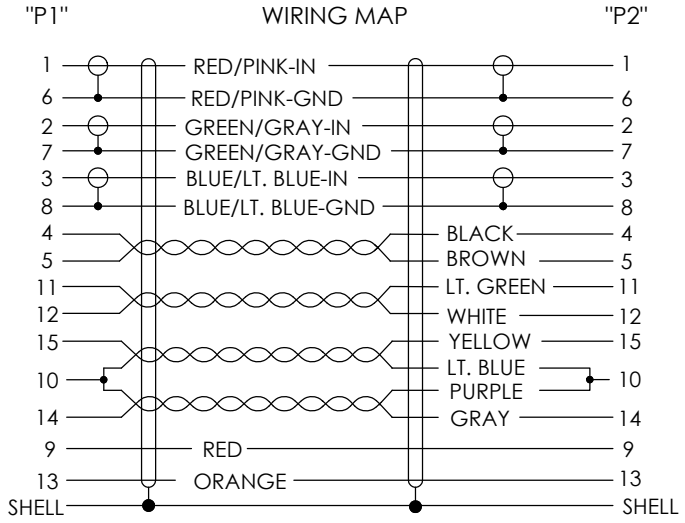

MODEL NUMBER	LENGTH	
	FEET	METERS
CGSVGAMM-1	1.0	.30
CGSVGAMM-3	3.0	.91
CGSVGAMM-5	5.0	1.52
CGSVGAMM-10	10.0	3.05
CGSVGAMM-20	20.0	6.10
CGSVGAMM-25	25.0	7.62
CGSVGAMM-50	50.0	15.24

NOTES:

1. CABLE ASSEMBLY SHALL BE TESTED FOR CONTINUITY.
2. CABLE ASSEMBLY SHALL BE INDIVIDUALLY PACKAGED IN ACCORDANCE WITH L-COM SPECIFICATION PS-0031.

REGULATORY COMPLIANCE:
ROHS, CE

UNLESS OTHERWISE SPECIFIED,
DIMENSIONS ARE IN INCHES [mm]
OVERALL CABLE LENGTH TOLERANCE:
≤12 [305] = +1 [25] / -0
>12 [305] ≤60 [1524] = +2 [51] / -0
>60 [1524] ≤120 [3048] = +4 [102] / -0
>120 [3048] ≤300 [7620] = +6 [152] / -0
>300 [7620] = +5% / -0%
ALL OTHER DIMENSIONAL TOLERANCES:
.X = ± .2 [5.08]
.XX = ± .02 [.51]
.XXX = ±.005 [.13]
PROJECTION

APPROVALS	DATE
DRAWN BY D.CASTRO	3/6/08
CHECKED BY J.RUST	3/7/08
APPROVED BY G.PEPIN	3/7/08

CONFIGURATION DETAILS OF UNDIMENSIONED FEATURES MAY VARY

COLOR VARIATIONS MAY OCCUR

L-COM Global Connectivity
50 HIGH STREET
NORTH ANDOVER, MA
01845

CATEGORY
AUDIO/VIDEO

PRODUCT DESCRIPTION
SVGA HD15 M/HD15 M

SIZE	FSCM NO.	DWG. NO.	REV.
A	43321	CGSVGAMM	F

SCALE: NONE | CAD FILE: CGSVGAMM.SLDDRW | SHEET 1 OF 1