PERFORMANCE
MADE
SMARTER

Product manual
5343
2-wire level transmitter

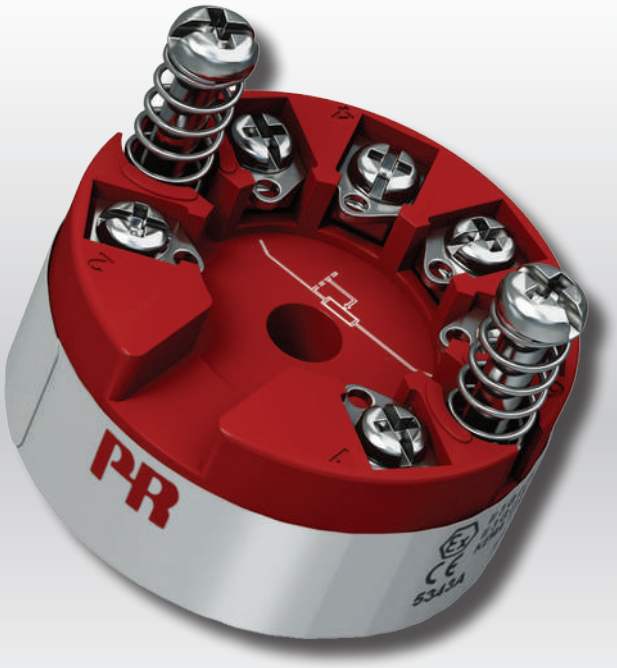

TEMPERATURE | I.S. INTERFACES | COMMUNICATION INTERFACES | MULTIFUNCTIONAL | ISOLATION | DISPLAY

No. 5343V107-UK
From ser. no. 141298001

PR electronics

6 Product Pillars
to meet your every need

Individually outstanding, unrivalled in combination

With our innovative, patented technologies, we make signal conditioning smarter and simpler. Our portfolio is composed of six product areas, where we offer a wide range of analog and digital devices covering over a thousand applications in industrial and factory automation. All our products comply with or surpass the highest industry standards, ensuring reliability in even the harshest of environments and have a 5-year warranty for greater peace of mind.



Temperature

Our range of temperature transmitters and sensors provides the highest level of signal integrity from the measurement point to your control system. You can convert industrial process temperature signals to analog, bus or digital communications using a highly reliable point-to-point solution with a fast response time, automatic self-calibration, sensor error detection, low drift, and top EMC performance in any environment.



I.S. Interface

We deliver the safest signals by validating our products against the toughest safety standards. Through our commitment to innovation, we have made pioneering achievements in developing I.S. interfaces with SIL 2 Full Assessment that are both efficient and cost-effective. Our comprehensive range of analog and digital intrinsically safe isolation barriers offers multifunctional inputs and outputs, making PR an easy-to-implement site standard. Our backplanes further simplify large installations and provide seamless integration to standard DCS systems.



Communication

We provide inexpensive, easy-to-use, future-ready communication interfaces that can access your PR installed base of products. All the interfaces are detachable, have a built-in display for readout of process values and diagnostics, and can be configured via push-buttons. Product specific functionality includes communication via Modbus and Bluetooth and remote access using our PR Process Supervisor (PPS) application, available for iOS and Android.



Multifunction

Our unique range of single devices covering multiple applications is easily deployable as your site standard. Having one variant that applies to a broad range of applications can reduce your installation time and training, and greatly simplify spare parts management at your facilities. Our devices are designed for long-term signal accuracy, low power consumption, immunity to electrical noise and simple programming.



Isolation

Our compact, fast, high-quality 6 mm isolators are based on microprocessor technology to provide exceptional performance and EMC-immunity for dedicated applications at a very low total cost of ownership. They can be stacked both vertically and horizontally with no air gap separation between units required.



Display

Our display range is characterized by its flexibility and stability. The devices meet nearly every demand for display readout of process signals, and have universal input and power supply capabilities. They provide a real-time measurement of your process value no matter the industry, and are engineered to provide a user-friendly and reliable relay of information, even in demanding environments.

2-wire level transmitter 5343

Table of contents

Application 4
Technical characteristics 4
Mounting / installation 4
Applications 4
Order 5
Electrical specifications 5
Connections 7
Block diagram 7
Programming 8
Mechanical specifications 8
Mounting of sensor wires 8
Configuration of potentiometer input 9
Activation of embedded linearisations 10
ATEX Installation Drawing - 5343A 11
ATEX Installation Drawing - 5343B 12
IECEx Installation Drawing - 5343A 14
IECEx Installation Drawing - 5343B 15
FM Installation Drawing - 5343B 17
INMETRO Installation Drawing - 5343A 19
INMETRO Installation Drawing - 5343B 20
Document history 22

2-wire level transmitter
5343

- Potentiometer or Ohmic input
- Programmable sensor error value
- High measurement accuracy
- Unique process calibration function
- Programmable via standard PC

Application

- Conversion of resistance variation to standard analog current signals, e.g. from Ohmic level sensors or valve positions.
- User-defined linearization function can be activated.

Technical characteristics

- Within a few seconds the user can program PR5343 to measure within the defined Ohmic values.
- Continuous check of vital stored data for safety reasons.
- The transmitter is protected against polarity reversal.
- PR5343 is configured to the current task by way of a PC, the PRelevel software and the communications interface Loop Link.
- The PRelevel configuration tool included in the PReset software has been developed specifically for the configuration of level applications. Among other things, it contains a function for "on line" measurement of input span as well as a linearization function for volume linear output from horizontal cylindrical tanks.

Mounting / installation

- For DIN form B sensor head mounting. In non-hazardous areas the 5343 can be mounted on a DIN rail with a special fitting.

Applications

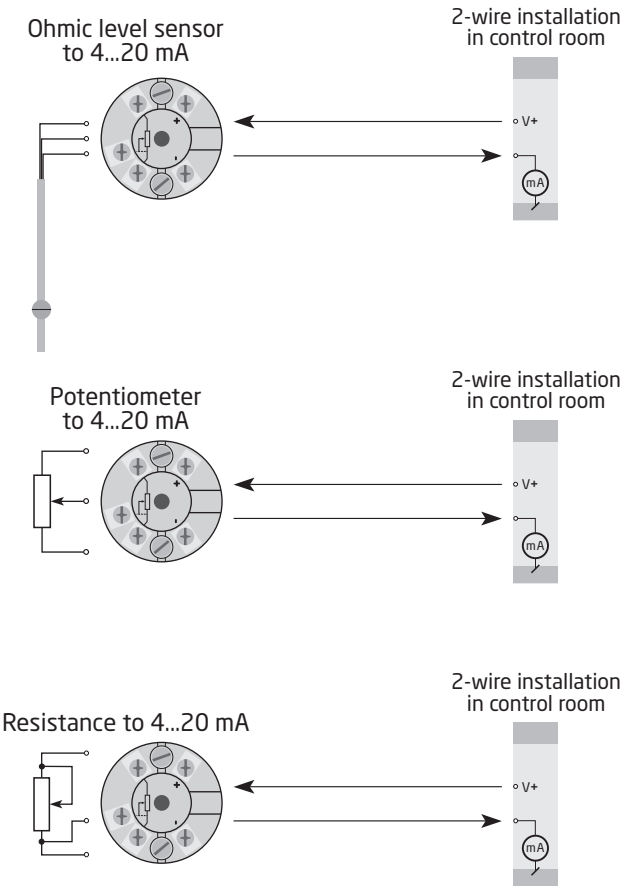

Order

Type	Version	
5343	Standard	: A
	ATEX, FM, IECEx & INMETRO	: B

Electrical specifications

Environmental conditions:

Operating temperature . . . . . -40°C to +85°C
Calibration temperature . . . . . 20...28°C
Humidity . . . . . < 95% RH (non-cond.)
Protection degree, enclosure / terminals . . . . . IP68 / IP00

Mechanical specifications:

Dimensions . . . . . Ø 44 x 20.2 mm
Weight . . . . . 50 g
Max. wire size . . . . . 1 x1.5 mm^2 stranded wire
Screw terminal torque . . . . . 0.4 Nm
Vibration . . . . . IEC 60068-2-6
2...25 Hz . . . . . ±1.6 mm
25...100 Hz . . . . . ±4 g

Common specifications:

Supply voltage, DC
Standard . . . . . 8.0...35 VDC
ATEX, FM, IECEx & INMETRO . . . . . 8.0...30 VDC
Internal power dissipation
Standard . . . . . 25 mW...0.8 W
ATEX, FM, IECEx & INMETRO . . . . . 25 mW...0.7 W
Voltage drop . . . . . 8.0 VDC
Warm-up time . . . . . 5 min.
Programming . . . . . Loop Link
Signal / noise ratio . . . . . Min. 60 dB
Response time (programmable) . . . . . 0.33...60 s
Signal dynamics, input . . . . . 19 bit
Signal dynamics, output . . . . . 16 bit
Effect of supply voltage variation . . . . . < 0.005% of span / VDC

Accuracy, the greater of general and basic values:

General values		
Input type	Absolute accuracy	Temperature coefficient
Lin. R	≤ ±0.1% of span	≤ ±0.01% of span / °C

Basic values		
Input type	Basic accuracy	Temperature coefficient
Lin. R	≤ ±0.05 Ω	≤ ±0.002 Ω / °C

EMC - immunity influence . . . . . < ±0.5% of span

Electrical specifications, input:

Linear resistance input:

Measurement range	0...100 kΩ
Min. measurement range (span)	1 kΩ
Max. offset	50% of selec. max. value
Cable resistance per wire (max.)	100 Ω
Sensor current	> 25 µA, < 120 µA
Effect of sensor cable resistance (3-wire)	< 0.002 Ω / Ω
Sensor error detection	Yes

Output:

Current output:

Signal range	4...20 mA
Min. signal range	16 mA
Updating time	135 ms
Load resistance	≤ (Vsupply - 8.0) / 0.023 [Ω]
Load stability	< ±0.01% of span / 100 Ω

Sensor error detection:

Programmable	3.5...23 mA
Namur NE43 Upscale	23 mA
Namur NE43 Downscale	3.5 mA

Of span = Of the presently selected range

Observed authority requirements:

EMC	2014/30/EU
RoHS	2011/65/EU
ATEX	2014/34/EU
EAC	TR-CU 020/2011

Marine approval:

DNV-GL, Ships & Offshore	Standard for Certification No. 2.4

Ex / I.S. approvals:

ATEX:	
5343A	KEMA 10ATEX0004 X
5343B	KEMA 03ATEX1538 X
IECEx	DEK 13.0036 X
FM	FM17US0013X
INMETRO	DEKRA 16.0014 X
EAC Ex TR-CU 012/2011	RU C-DK.GB08.V.00410

Connections

Input:

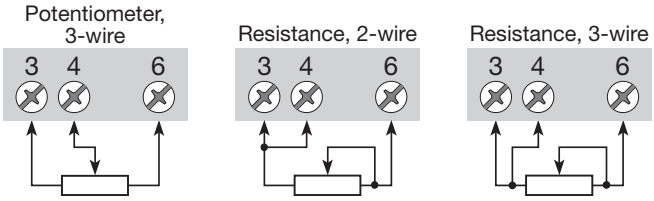

Output:

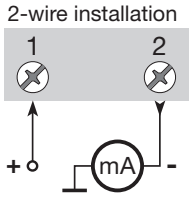

Block diagram

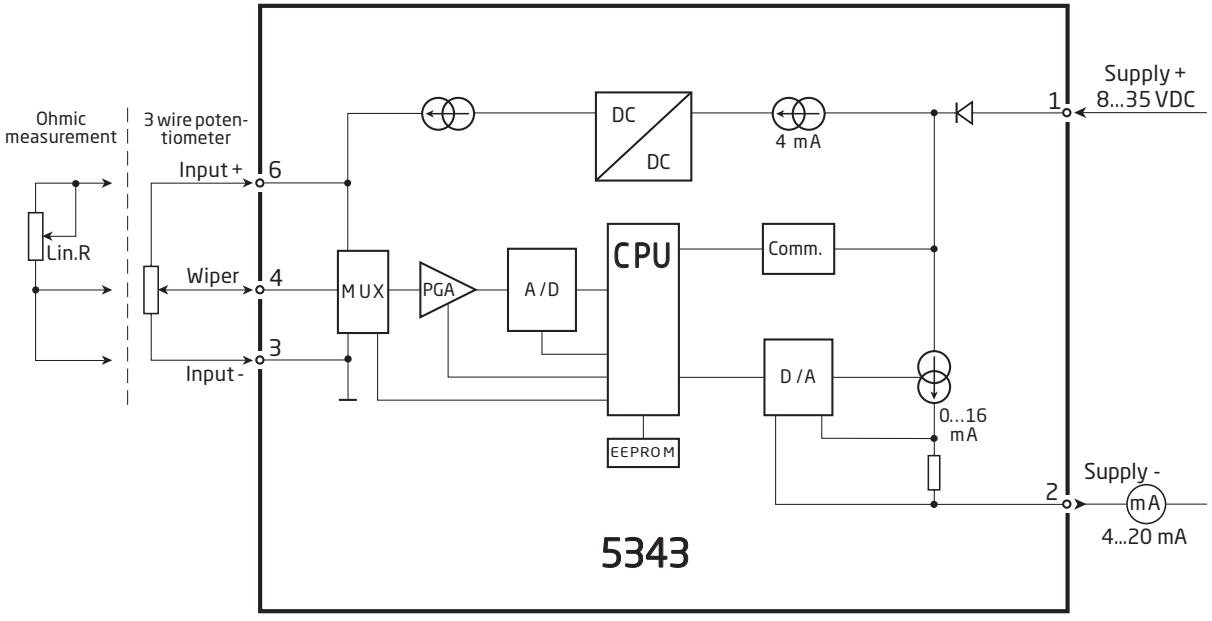

Programming

- Loop Link is a communications interface that is needed for programming 5343.
- For programming please refer to the drawing below and the help functions in PReset.
- Loop link is not approved for communication with modules installed in harzardous (Ex) areas.

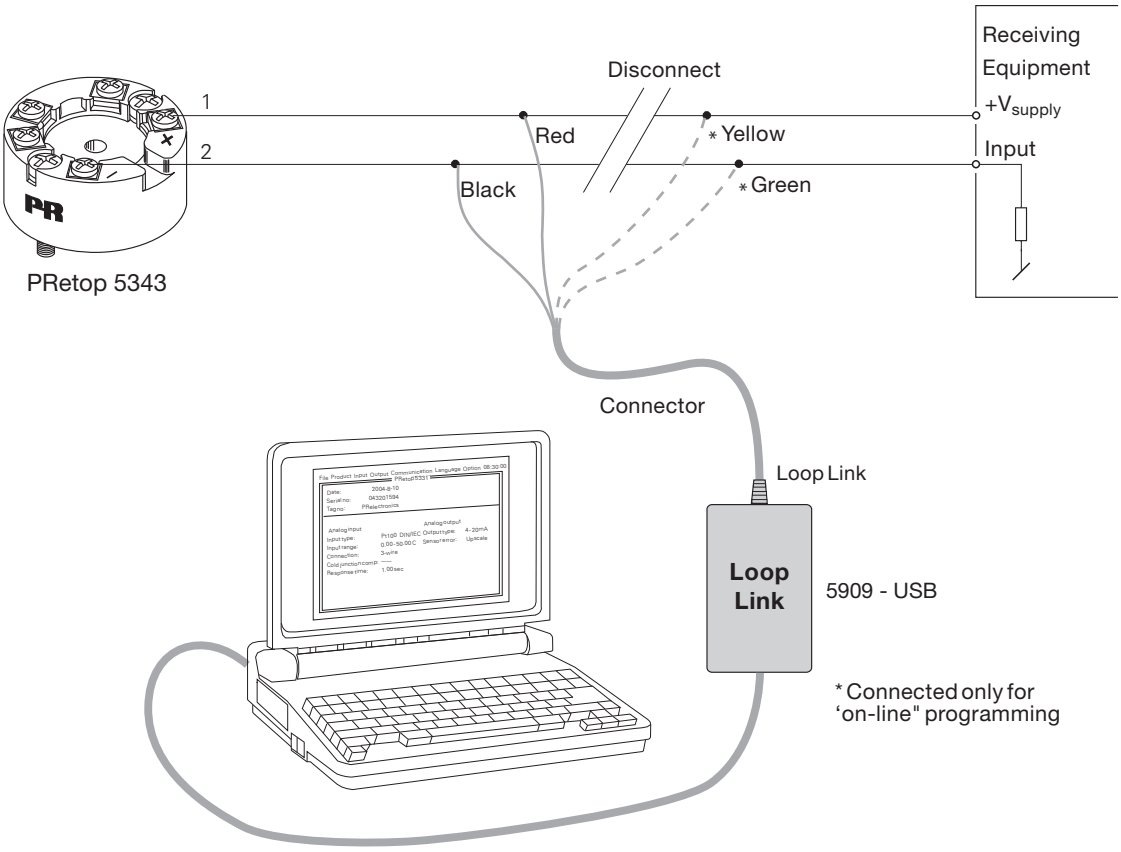

Mechanical specifications

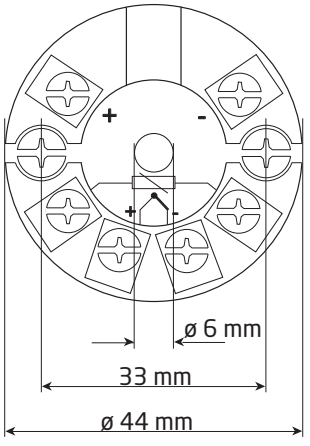

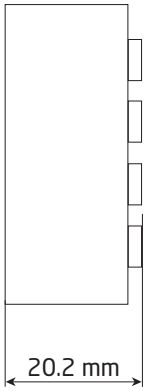

Mounting of sensor wires

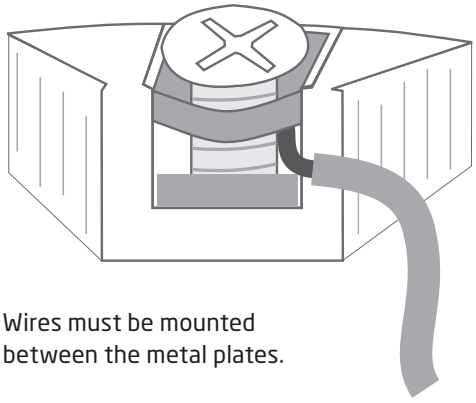

Wires must be mounted
between the metal plates.

Configuration of potentiometer input

In an Ohmic level sensor the resistance value changes when a magnetic floater activates the reed contacts in the sensor. This means that it is usually not possible to make use of the entire level sensor as input span. When PR5343 is used with a potentiometer input, the PRelevel software contains the following special functions for configuration:

[Calibration Password] is 4711. This password should be entered at program start. The only parameters which can be changed without entering this password are Input Low and High for the potentiometer input. The menu item is located under **Tools > Options**.
Please pay special attention to the text in the **'Information'** window during transmission. When the configuration cannot be sent to the transmitter due to lack of password, the following text will appear: 'Operation aborted.' 'Configuration NOT transmitted to the device.'

The following description of configuration with potentiometer input is based on figure 1. Please note that the PRelevel software only comes in an English-language version. Therefore the menu texts are represented here as they are seen on the screen. First choose the **[Input]** tab:

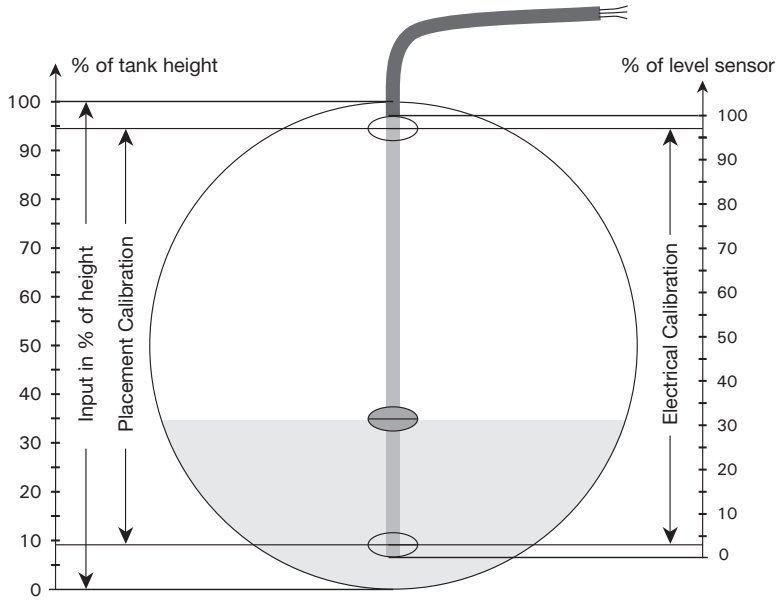

Figure 1, cross section of horizontal cylindrical tank

[Electrical Calibration] Enter the range to be detected by the connected potentiometer or let PRelevel measure the available range. The transmitter must be connected to the communications interface before the values can be measured.
The values in figure 1 are Low = 3% og High = 97%.

[Placement Calibration] Enter the placement of the 'Electrical Calibration' Low and High points of the level sensor in relation to the height of the tank. These values are used for calculation of linearization values and for calculation of 0 and 100% height.
The values in figure 1 are Low = 9% and High = 94%.

[Input] Enter the desired input span in relation to the height. When input Low and High are selected as 0 and 100%, the input can never go below 9% and above 94% due to the design and mounting of the level sensor. If the output span is 4...20 mA, the output will only vary between 5.44...19.04 mA.
The values in figure 1 are Low = 0% and High = 100%.

Activation of embedded linearisations

The PRelevel software contains embedded linearization functions for horizontal cylindrical tanks and spherical tanks. The linearization functions can be activated as follows:

Custom input type: In order to gain access to a customer-defined linearization, the selection in the **[General Type]** input box must end with the text 'Custom' and the **[Calibration Password]** 4711 must be entered.

Activation of linearization: Choose the [Options] tab in the PRelevel 5343 window. If one of the embedded linearizations is to be used, the selection in the **'Linearization'** window must be 'Polynomial.....(Relative)' in order to retrieve the most accurate linearization files. The files are retrieved by way of the following menus: **>Specify** + select **>File > Open** in the main menu + select **>File name >Open** in the file dialogue box.

User-defined linearization: It is possible to enter specific linearization tables in the >Specify menu.

ATEX Installation drawing

For safe installation of 5343A the following must be observed. The module shall only be installed by qualified personnel who are familiar with the national and international laws, directives and standards that apply to this area.
Year of manufacture can be taken from the first two digits in the serial number.

ATEX Certificate KEMA 10ATEX 0004X

Marking

II 3 G Ex nA [ic] IIC T4 … T6 Gc
II 3 G Ex ic IIC T4…T6 Gc
II 3 D Ex ic IIIC Dc

Standards EN 60079-0 : 2012, EN 60079-11 : 2012, EN 60079-15 : 2010

T4: -40 ≤ Ta ≤ 85ºC T6: -40 ≤ Ta ≤ 60ºC	**Terminal: 3,4,6** Ex nA [ic]	**Terminal: 1,2** Ex nA	**Terminal: 1,2** Ex ic
	Uo: 5V Io: 4 mA Po: 20 mW Lo: 900 mH Co: 1000 µF	Umax ≤ 35 VDC	Ui = 35 VDC Ii = 110 mA Li = 10 µH Ci = 1.0 nF

Special conditions for safe use.

For type of protection Ex nA, the transmitter shall be mounted in a metal enclosure providing a degree of protection of at least IP54 according to EN60529.

For use in the presence of combustible dusts the transmitter shall be mounted in an enclosure providing a degree of protection of at least IP6X in accordance with o EN60529, the surface temperature of the outer enclosure is 20 K above the ambient temperature

For an ambient temperature ≥ 60ºC, heat resistant cables shall be used with a rating of at least 20 K above the ambient temperature.

LERBAKKEN 10, 8410 RØNDE DENMARK. WWW.PRELECTRONICS.COM

ATEX Installation drawing

For safe installation of 5343B the following must be observed. The module shall only be installed by qualified personnel who are familiar with the national and international laws, directives and standards that apply to this area.
Year of manufacture can be taken from the first two digits in the serial number.

ATEX Certificate KEMA 03ATEX 1538 X

Marking

II 1 G Ex ia IIC T4...T6 Ga
II 1 D Ex ia IIIC Da
II 1 M Ex ia I Ma

Standards EN 60079-0 : 2012, EN 60079-11 : 2012, EN 60079-26 : 2007,

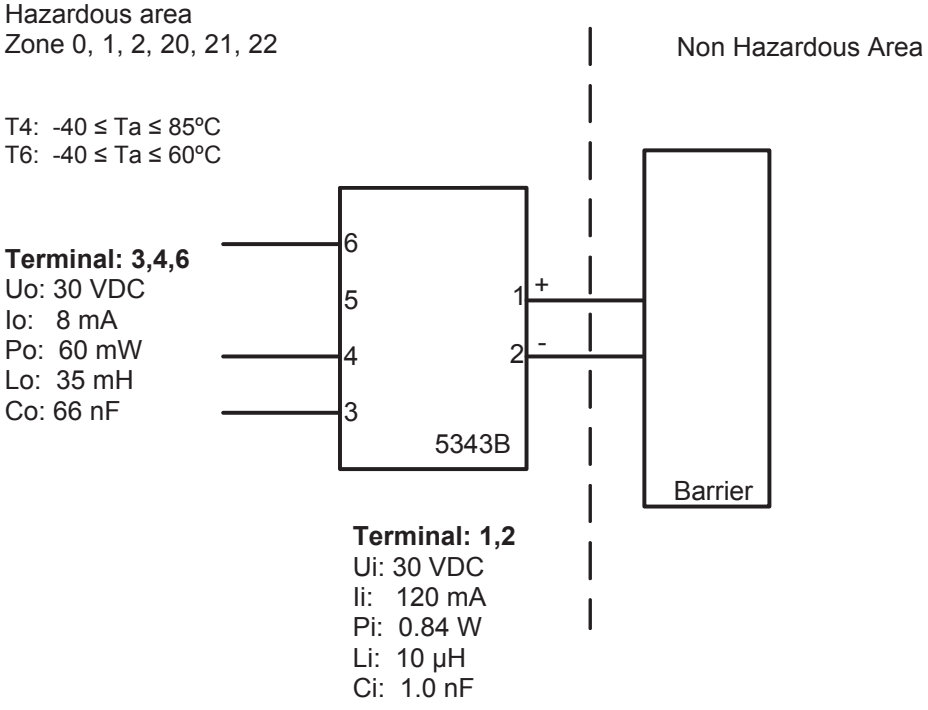

Installation notes.

In a potentially explosive gas atmosphere, the transmitter shall be mounted in an enclosure in order to provide a degree of protection of at least IP20 according to EN60529.

If the transmitter is installed in an explosive atmosphere requiring the use of equipment of category 1 G, 1 M or 2 M, and if the enclosure is made of aluminum, if must be installed such, that ignition sources due to impact and friction sparks are excluded.

If the enclosure is made of non-metallic materials, electrostatic charging shall be avoided.

For installation in a potentially explosive dust atmosphere, the following instructions apply:

The transmitter shall be mounted in a metal enclosure form B according to DIN43729 that is providing a degree of protection of at least IP6X according to EN60529, that is suitable for the application and correctly installed.

Cable entries and blanking elements shall be used that are suitable for the application and correctly installed.

For an ambient temperature ≥ 60ºC, heat resistant cables shall be used with a rating of at least 20 K above the ambient temperature.

The surface temperature of the enclosure is equal to the ambient temperature plus 20 K, for a dust layer with a thickness up to 5 mm.

LERBAKKEN 10, 8410 RØNDE DENMARK. WWW.PRELECTRONICS.COM

IECEx Installation drawing



For safe installation of 5343A the following must be observed. The module shall only be installed by qualified personnel who are familiar with the national and international laws, directives and standards that apply to this area.
Year of manufacture can be taken from the first two digits in the serial number.

Certificate	IECEx DEK 13.0036X	
Marking	Ex nA [ic] IIC T6..T4 Gc Ex ic IIC T6..T4 Gc Ex ic IIIC Dc	T4: -40 ≤ Ta ≤ 85ºC T6: -40 ≤ Ta ≤ 60ºC
Standards	IEC 60079-0 : 2011, IEC 60079-11 : 2011, IEC 60079-15 : 2010	

Terminal	Ex nA [ic]	Ex ic
1, 2	Umax = 35 V	Ui : 35 V, Ii:110 mA, Ii:10 µH, Ci:1,0 nF
3, 4, 6	Uo: 5 V, Io: 4 mA, Po: 20 mW, Lo: 900 mH, Co: 1000 µF	

Installation note:

For installation in a potentialy explosive gas atmosphere, the following instructions apply:

For nA installation the transmitter must be installed in an metal enclosure e.g. a form B enclosure, providing a degree of protection of at least IP54 according to IEC60529 that is suitable for the application and correctly installed or in an enclosure with type of protection Ex n or Ex e.

For intrinsically safe installation the transmitter must be installed in enclosure providing a degree of protection of at least IP20 according to IEC60529 and that is suitable for the application.

Cable entry devices and blanking elements shall fulfill the same requirements

For an ambient temperature ≥ 60ºC, heat resistant cables shall be used with a rating of at least 20 K above the ambient temperature.

For installation in a potentially explosive dust atmposphere, the following instructions apply:
The surface temperature of the enclosure is equal to the ambient temperature plus 20 K, for a dust layer with a thickness up to 5 mm.
The transmitter must be mounted in a enclosure according to DIN 43729 that provides a degree of protection of at least IP6X according to IEC60529, and that is suitable for the application. Cable entry devices and blanking elements shall fulfill the same requirements.

LERBAKKEN 10, 8410 RØNDE DENMARK. WWW.PRELECTRONICS.COM

IECEx Installation drawing

For safe installation of 5343B the following must be observed. The module shall only be Installed by qualified personnel who are familiar with the national and international laws, directives and standards that apply to this area.
Year of manufacture can be taken from the first two digits in the serial number.

Certificate	IECEx DEK 13.0036X
Marking	Ex ia IIC T4…T6 Ga Ex ia IIIC Da Ex ia I Ma
Standards	IEC 60079-0 : 2011, IEC 60079-11 : 2011, IEC 60079-26:2006

Hazardous area
Zone 0, 1, 2, 20, 21, 22, M1

T4: -40 ≤ Ta ≤ 85ºC
T5: -40 ≤ Ta ≤ 60ºC
T6: -40 ≤ Ta ≤ 45ºC

Non Hazardous Area

Terminal: 3,4,6
Uo: 30 VDC
Io: 8 mA
Po: 60 mW
Lo: 35 mH
Co: 66 nF

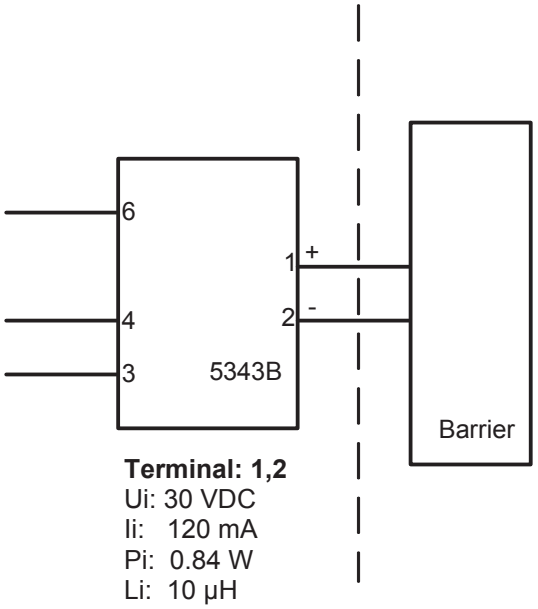

Terminal: 1,2
Ui: 30 VDC
Ii: 120 mA
Pi: 0.84 W
Li: 10 µH
Ci: 1.0 nF

Installation notes.

In a potentially explosive gas atmosphere, the transmitter shall be mounted in a metal form B enclosure in order to provide a degree of protection of at least IP20 according to IEC60529. If however the environment requires a higher degree of protection, this shall be taken into account.

If the transmitter is installed in an explosive atmosphere requiring the use of equipment protection level Ga, Ma and Mb, and if the enclosure is made of aluminum, it must be installed such, that ignition sources due to impact and friction sparks are excluded.

For installation in a potentially explosive dust atmosphere, the following instructions apply:

For explosive dust atmospheres, the surface temperature of the outer enclosure is 20 K above the ambient temperature.

The transmitter shall be mounted in a metal enclosure form B according to DIN43729 that is providing a degree of protection of at least IP6X according to IEC60529, that is suitable for the application and correctly installed.

Cable entries and blanking elements shall be used that are suitable for the application and correctly installed.

For an ambient temperature ≥ 60ºC, heat resistant cables shall be used with a rating of at least 20 K above the ambient temperature.

LERBAKKEN 10, 8410 RØNDE DENMARK. WWW.PRELECTRONICS.COM

FM Installation Drawing

Model 5331D, 5332D, 5333D and 5343B

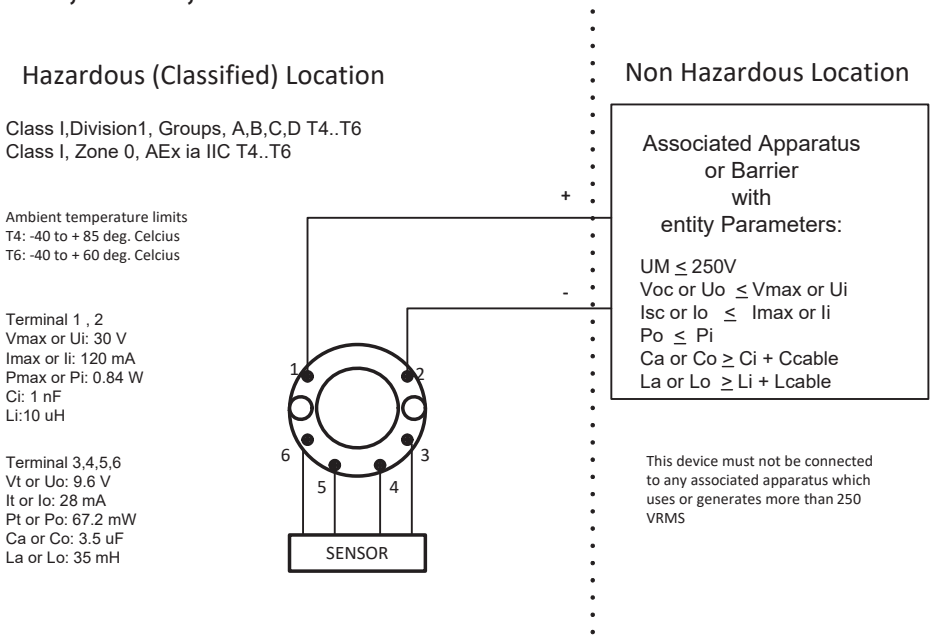

Model 5335D, 5337D

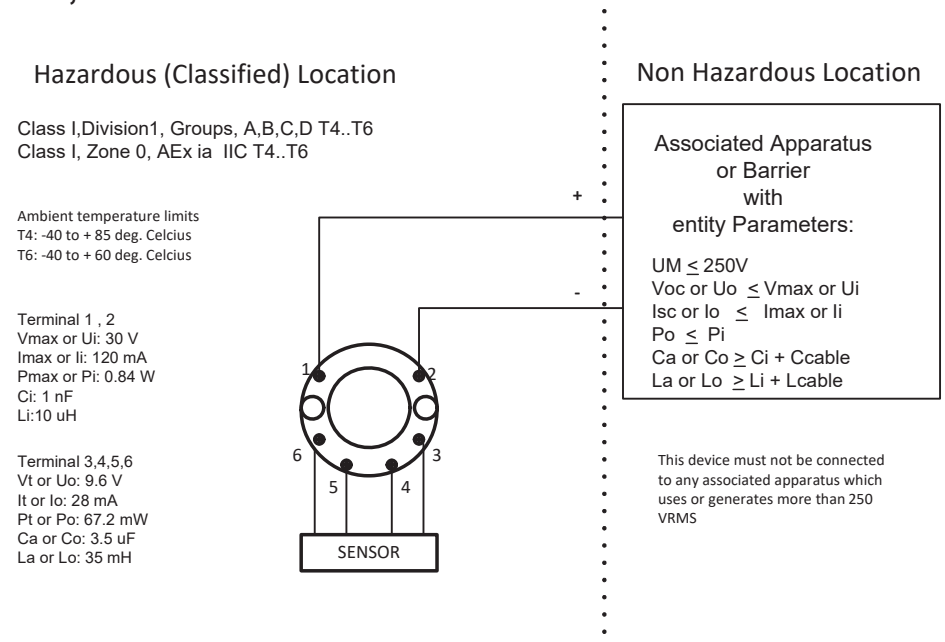

The entity concept
The Transmitter must be installed according to National Electrical Code (ANSI-NFPA 70) and shall be installed with the enclosure, mounting, and spacing segregation requirement of the ultimate application.

Equipment that is FM-approved for intrinsic safety may be connected to barriers based on the ENTITY CONCEPT. This concept permits interconnection of approved transmitters, meters and other devices in combinations which have not been specifically examined by FM, provided that the agency's criteria are met. The combination is then intrinsically safe, if the entity concept is acceptable to the authority having jurisdiction over the installation.

The entity concept criteria are as follows:

The intrinsically safe devices, other than barriers, must not be a source of power.
The maximum voltage Ui(V_{MAX}) and current Ii(I_{MAX}), and maximum power Pi(Pmax), which the device can receive and remain intrinsically safe, must be equal to or greater than the voltage (Uo or V_{OC} or V_t) and current (Io or I_{SC} or I_t) and the power Po which can be delivered by the barrier.

The sum of the maximum unprotected capacitance (C_i) for each intrinsically device and the interconnecting wiring must be less than the capacitance (C_a) which can be safely connected to the barrier.

The sum of the maximum unprotected inductance (L_i) for each intrinsically device and the interconnecting wiring must be less than the inductance (L_a) which can be safely connected to the barrier.

The entity parameters Uo,V_{OC} or V_t and Io,I_{SC} or I_t, and C_a and L_a for barriers are provided by the barrier manufacturer.

NI Field Circuit Parameters

Model 5331D, 5332D, 5333D, 5335D, 5337D and 5343B

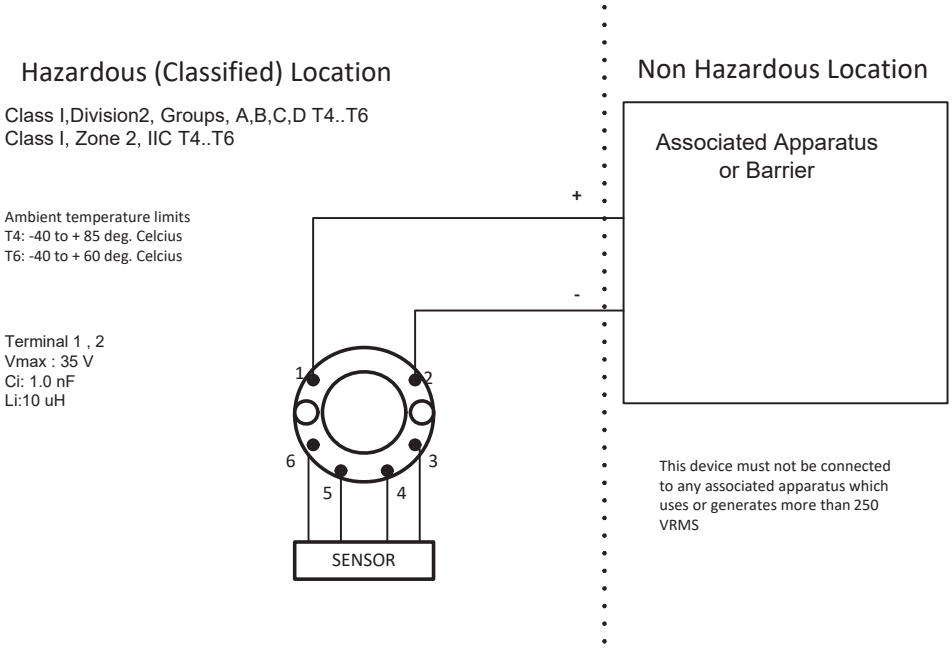

Desenho de Instalação INMETRO



Para instalação segura do 5333A ou 5343A o seguinte deve ser observado. O modo deve apenas ser instalado por pessoas qualificadas que são familiarizadas com as leis nacionais e internacionais, diretrizes e padrões que se aplicam a esta área.
Ano de fabricação pode ser pego dos dois primeiros dígitos do número de série.

Certificado DEKRA 16.0014 X

Marcas
Ex nA [ic] IIC T6..T4 Gc
Ex ic IIC T6..T4 Gc
Ex ic IIIC Dc

T4: -40 ≤ Ta ≤ 85ºC
T6: -40 ≤ Ta ≤ 60ºC

Normas ABNT NBR IEC 60079-0 : 2013; ABNT NBR IEC 60079-11 : 2013
ABNT NBR IEC60079-15 : 2012

Terminais	Ex nA [ic]	Ex ic
1,2	U ≤ = 35V	Ui : 35V, Ii:110mA, Ii:10µH, Ci:1,0nF
3,4,6	Uo: 5V, Io: 4mA, Po: 20mW, Lo: 900mH, Co: 1000µF	

Notas para instalação

Para a instalação em uma atmosfera de gás potencialmente explosivo, se aplicam as instruções a seguir:
Para a instalação nA o transmissor deve ser instalado em um invólucro de metal, por exemplo, gabinete em forma B que forneça um grau de proteção de pelo menos IP54 de acordo com IEC60529 ou em um invólucro com tipo de proteção Ex n ou Ex e.
Para a instalação Ex ic o transmissor deve ser instalado em um invólucro proporcionando um grau de proteção de IP20, pelo menos, de acordo com a norma ABNT NBR IEC 60529. E o invólucro deve ser adequado para a aplicação e corretamente instalado.
Dispositivos de entrada de cabos e elementos de supressão devem cumprir os mesmos requisitos.
Para temperatura ambiente >= 60ºC, fios de resistência ao calor devem ser usados com uma faixa de pelo menos 20K acima da temperatura ambiente.
Para a instalação em uma atmosfera de poeira potencialmente explosiva , se aplicam as instruções a seguir:
O transmissor deve ser montado em invólucro de metal forma B de acordo com DIN43729 que está fornecendo um grau de proteção de pelo menos IP6X de acordo com ABNT NBR IEC60529.
O invólucro deve ser adequado para aplicação e instalado corretamente.
As entradas dos cabos e os elementos de obturação que podem ser utilizados são adequados para a aplicação e corretamente instalados.
A temperatura da superfície do invólucro é igual à temperatura ambiente mais 20 K, para uma camada de pó , com uma espessura até 5 mm.

LERBAKKEN 10, 8410 RØNDE DENMARK. WWW.PRELECTRONICS.COM

Desenho de Instalação InNMETRO

Para instalação segura do 5333D ou 5343B o seguinte deve ser observado. O modo deve apenas ser instalado por pessoas qualificadas que são familiarizadas com as leis nacionais e internacionais, diretrizes e padrões que se aplicam a esta área.
Ano de fabricação pode ser pego dos dois primeiros dígitos do número de série.

Certificado	DEKRA 16.0014 X
Marcas	Ex ia IIC T6…T4 Ga Ex ia IIIC Da
Normas	ABNT NBR IEC 60079-0 : 2013; ABNT NBR IEC 60079-11 : 2013

Áreas Risco
Zona 0, 1, 2, 20, 21, 22, M1

T4: -40 ≤ Ta ≤ 85ºC
T5: -40 ≤ Ta ≤ 60ºC
T6: -40 ≤ Ta ≤ 45ºC

Areas de não Risco

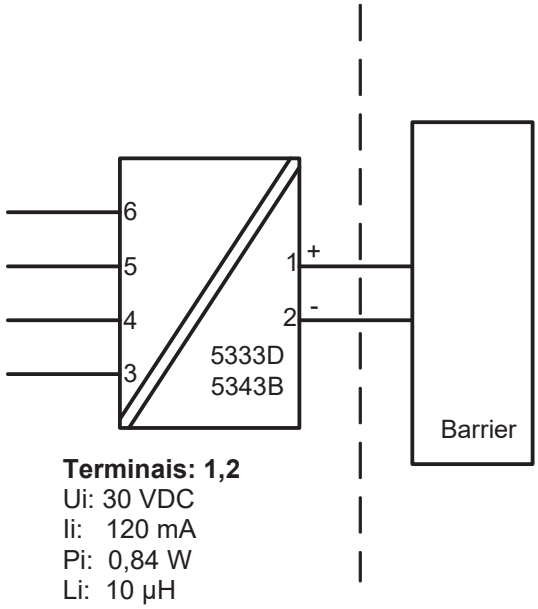

Terminais:
3,4,5,6
Uo: 30 VDC
Io: 8 mA
Po: 60 mW
Lo: 35 mH
Co: 66 nF

Terminais: 1,2
Ui: 30 VDC
Ii: 120 mA
Pi: 0,84 W
Li: 10 µH
Ci: 1,0 nF

Notas de Instalação.

Em uma atmosfera de gás potencialmente explosiva, o transmissor deve ser montado em um enclousure a fim de garantir um grau de proteção de no mínimo IP20 de acordo com ABNT NBR IEC60529. Se contudo o ambiente requer um nível de proteção maior, isso deve ser levado em conta

Se o transmissor é instalado em uma atmosfera explosiva exigindo o uso de equipamento de proteção de nível Ga e se o invólucro é feito de alumínio, ele deve ser instalado de modo que, mesmo em caso de avaria rara, fontes de ignição devido a impacto e fricção, faíscas são eliminadas; Se o enclosure é feito de materiais não metálicos, cargas eletroestáticas devem ser evitadas.
Se o enclosure é feito de materiais não metálicos, cargas eletroestáticas devem ser evitadas.

Para instalação em atmosfera de poeira potencialmente explosiva, as instruções a seguir:

O transmissor deve ser montado em invólucro de metal forma B de acordo com DIN43729 que está fornecendo um grau de proteção de pelo menos IP6X de acordo com ABNT NBR IEC60529. O invólucro deve ser adequado para aplicação e instalado corretamente.

As entradas dos cabos e os elementos de obturação que podem ser utilizados são adequados para a aplicação e corretamente instalados.

Para temperatura ambiente >= 60ºC, fios de resistência ao calor devem ser usados com uma faixa de pelo menos 20K acima da temperatura ambiente.

A temperatura da superfície do invólucro é igual à temperatura ambiente mais de 20 K, por uma camada de pó, com uma espessura até 5 mm.

Document history

The following list provides notes concerning revisions of this document.

Rev. ID	Date	Notes
104	14/14	IECEx, FM and INMETRO approvals added
105	15/03	GL marine approval added
106	17/07	IECEx, FM and INMETRO installation drawings updated
107	18/48	FM installation drawing updated

We are near you, *all over the world*

Our trusted red boxes are supported wherever you are

All our devices are backed by expert service and a 5-year warranty. With each product you purchase, you receive personal technical support and guidance, day-to-day delivery, repair without charge within the warranty period and easily accessible documentation.

We are headquartered in Denmark, and have offices and authorized partners the world over. We are a local business with a global reach. This means that we are always nearby and know your local markets well. We are committed to your satisfaction and provide PERFORMANCE MADE SMARTER all around the world.

For more information on our warranty program, or to meet with a sales representative in your region, visit prelectronics.com.

Benefit today from
PERFORMANCE MADE SMARTER

PR electronics is the leading technology company specialized in making industrial process control safer, more reliable and more efficient. Since 1974, we have been dedicated to perfecting our core competence of innovating high precision technology with low power consumption. This dedication continues to set new standards for products communicating, monitoring and connecting our customers' process measurement points to their process control systems.

Our innovative, patented technologies are derived from our extensive R&D facilities and from having a great understanding of our customers' needs and processes. We are guided by principles of simplicity, focus, courage and excellence, enabling some of the world's greatest companies to achieve PERFORMANCE MADE SMARTER.