

Blanking plug, Flat Front

Part no.	**M30C-FB**
Catalog No.	**187028**
Eaton Catalog No.	**M30C-FB**

Delivery program

Product range			Accessories
Part group reference (e.g. DIL)			M30
Basic function accessories			Blanking plugs
Function			For closing off of spare mounting locations
Single unit/Complete unit			Single unit
Material			Stainless steel
Degree of Protection			IP67, IP69K
Connection to SmartWire-DT			no

Technical data

General

Degree of Protection			IP67, IP69K
Ambient temperature			
Open		°C	-25 - +70

Design verification as per IEC/EN 61439

Technical data for design verification			
Operating ambient temperature min.		°C	-25
Operating ambient temperature max.		°C	70

Technical data ETIM 6.0

Low-voltage industrial components (EG000017) / Blind cover for control circuit devices (EC002023)			
Electric engineering, automation, process control engineering / Low-voltage switch technology / Command and alarm device / Blind cover for control circuit devices (ecl@ss8.1-27-37-12-39 [ACN976008])			
Material			Metal
Construction type lens			Round
Hole diameter		mm	30
Width opening		mm	0
Height meter opening		mm	0
Colour			-

Dimensions

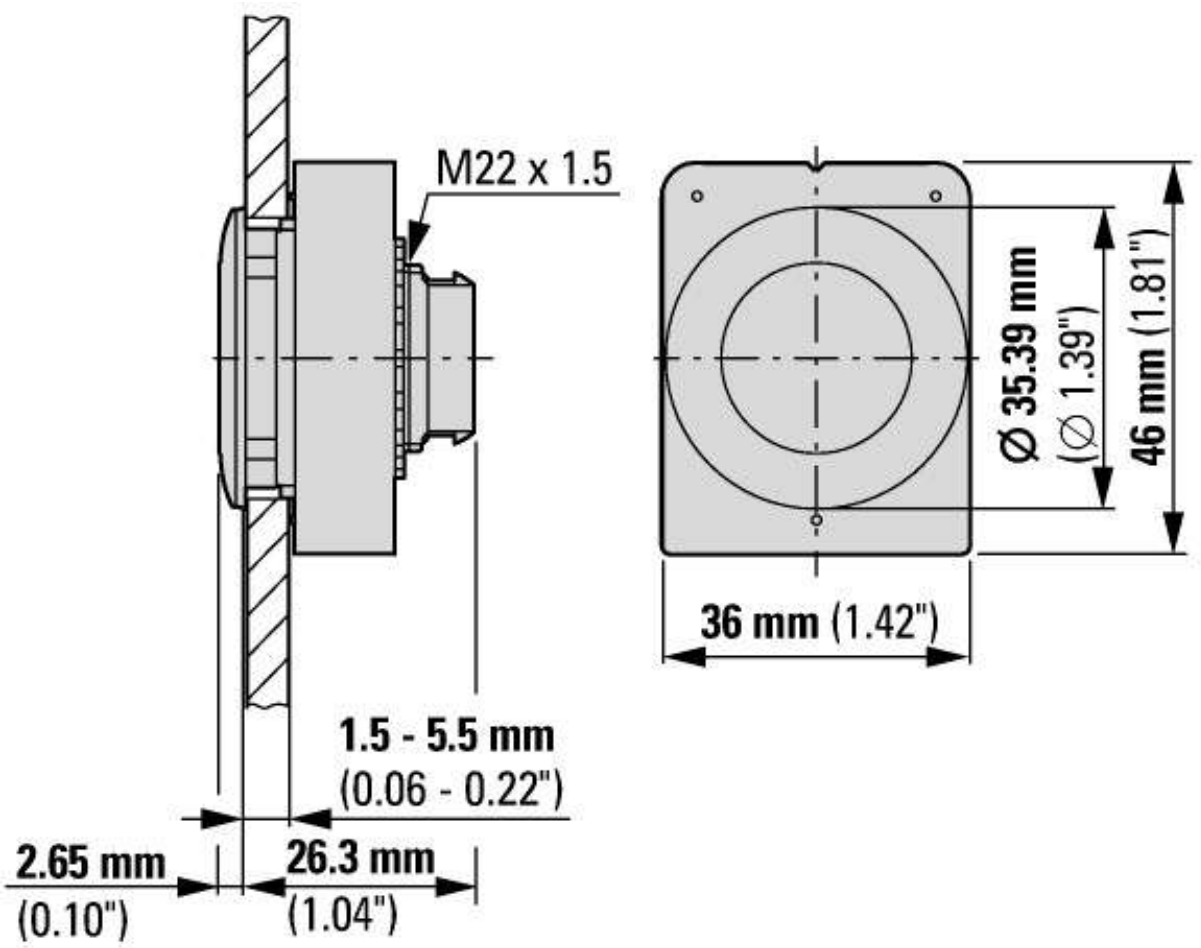

Additional product information (links)

IL047019ZU Flat Front	
IL047019ZU Flat Front	ftp://ftp.moeller.net/DOCUMENTATION/AWA_INSTRUCTIONS/IL047019ZU2017_02.pdf

© 07/2017 by Eaton Industries GmbH