Certificate No. FM163

ISO 9001

TI-P022-01
ST Issue 2

Sight Check
(Combined sight glass and check valve)

Description
A Sight Check is a combined sight glass and check valve. It is used to observe discharges from steam traps. The position of the ball check indicates whether or not condensate is flowing. Where condensate rises after the trap it eliminates the need for a separate check valve thus simplifying installation.
It is particularly useful for commissioning steam traps fitted with steam lock release (SLR).
It can also be used on other liquid lines for which the materials of construction are compatible.

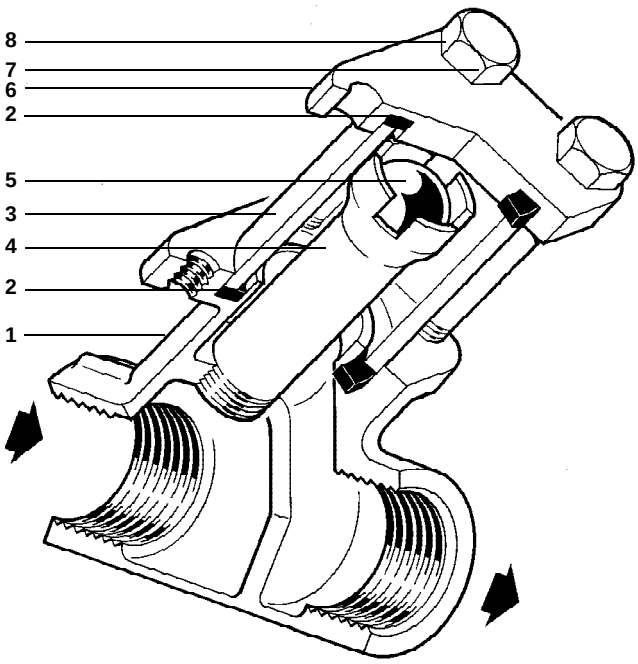

Available sizes and pipe connections
½", ¾" and 1" screwed BSP or NPT

Limiting conditions
Maximum operating pressure 3.6 bar g
Maximum operating temperature 148 °C
Cold hydraulic test pressure 7 bar g

Operating range

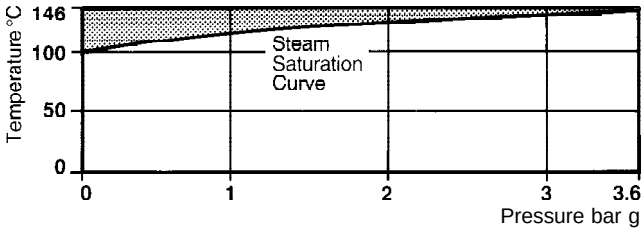

k_V values

Size	½"	¾"	1"
Kv	2.6	2.81	4.59

For conversion C_V (UK) = K_V x 0.97 C_V (US) =K_V x 1.17

Materials

Item	Description	Material	Specification
1	Body	Gunmetal	BS 1400 LG1
2	Gasket	Glass reinforced graphite laminate	
3	Sight Tube	Borosilicate Glass	
4	Discharge Tube	Copper	BS 2871 PT2 C106
5	Ball Check	Stainless Steel	BS 970 420 S45
6	Cover	Brass	BS 1400 PC81
7	Cover Bolts	Steel Zinc plated	BS 3692 Gr 8.8
8	Shakeproof Washers	Steel Zinc Plated	

How to specify
½" BSP SPIRAX SARCO Sight Check having gunmetal body and borosilicate glass tube.

Local regulations may restrict the use of this product to below the conditions quoted.
In the interests of development and improvement of the product, we reserve the right to change the specification.

© Copyright 1995

Dimensions (approximate) in millimetres

Size	A	B	C	D	E	Weight
½"	76	95	44	38	64	0.6 kg
¾"	76	95	44	38	64	0.6 kg
1"	89	108	54	38	64	1.2 kg

Installation

Sight checks can be fitted in either a horizontal or a vertical line on the outlet side of a steam trap. Where the trap is a blast discharge type e.g. thermodynamic, the sight check must be fitted at least 1m from the trap. This is to ensure that the glass tube is not subjected to thermal shock or pressure. Reasonable steps should be taken to protect personnel from injury in the unlikely event that the glass breaks.

Ensure access is available to enable the withdrawal of the discharge tube.

Warning: In some applications condensate can act as a solvent for glass. It is recommended that the sight tube is periodically checked for thinning. If there is any evidence of thinning then the sight tube should be replaced immediately.

Spare parts

The spare parts available are shown in heavy outline. Parts drawn in broken line are not supplied as spares.

AVAILABLE SPARE	ITEM	QTY
Sight Tube Assembly	3	1 off
	2	2 off
Discharge Tube Assembly	4,5	2 off
Set of Bolts and Washers	7,8	set of 4*
Gaskets	2	pkt of 6†

Available spares are common to ½" and ¾" sizes, but not 1".

* Earlier models used studs, nuts and washers and these are contained in the Set of Bolts pack

† Earlier models used ethylene propylene gaskets which were considerably thicker than graphite laminate

How to order

Always order spares by using the description given in the column headed Available Spare and stating the size of the Sight Check.

Example: 1 — Sight Tube Assembly for ½" SPIRAX SARCO Sight Check

How to fit

Before carrying out any work on this equipment make sure that it is fully isolated.

To renew sight tube

Undo bolts. Remove cover and sight tube. Take out old gaskets and carefully clean out recesses. Fit new gaskets supplied with sight tube and re-assemble, tightening bolts evenly and without excessive force. It is advisable to do up the bolts little more than finger tight, re-tightening as necessary after a period of use.

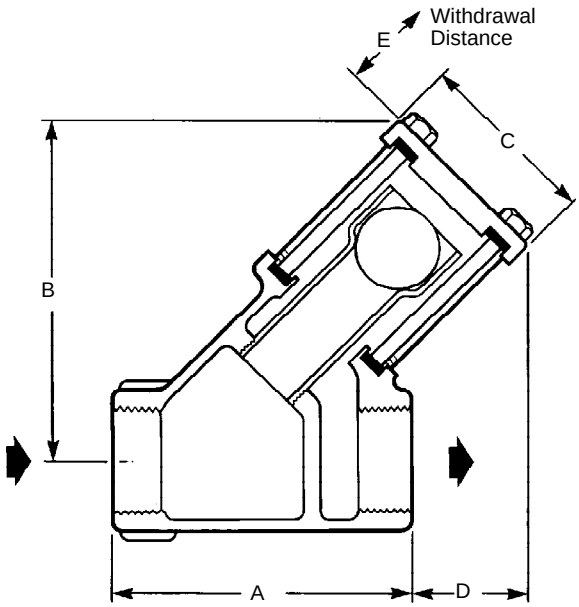

To renew discharge tube

Remove cover and sight tube as above, and lift out ball check. Using notches, carefully unscrew old tube and fit new one. Renew gaskets, fit new ball check and re-assemble as above.

Recommended tightening torques

Item	DN	mm or	Nm
7	½" & ¾"	M6 x 65	1.6 - 2.3
7	1"	M6 x 65	1.8 - 2.5
4			5-6

