TECHNICAL
OVERVIEW

Keysight DAQ970A Data Acquisition/System



KEYSIGHT TECHNOLOGIES

KEYSIGHT TECHNOLOGIES

At a fraction of the cost of other standalone data acquisition systems

- 3-slot mainframe with built-in 6½ digit DMM and
- 8 switch and control plug-in modules
- Measures and converts 12 different input signals: temperature with thermocouples, RTDs and thermistors; dc/ac volts; 2- and 4-wire resistance; frequency and period; dc/ac current and capacitance
- LAN and USB for easy connectivity to your PC:
- Graphical Web interface for point and click monitor and control
- USB flash drive support to copy/log data in standalone applications

Features

Price and performance beyond compare

Go ahead and compare the Keysight Technologies, Inc. DAQ970A Data Acquisition System with other data acquisition systems currently available. You'll find it hard to come up with a system that offers the powerful measurement performance, flexibility, connectivity options and ease of use of the DAQ970A—even in systems costing three to five times as much.

What can you expect from a data acquisition system that's this affordable? Measurements you can trust

We took the measurement engine from our best-selling benchtop DMM and embedded it inside a 3-slot mainframe. You get the benefit of proven Keysight measurement performance, universal inputs with built-in signal conditioning, and modular flexibility, all in a low-cost, compact data acquisition package. The DAQ970A features 6½ digits (22 bits) of resolution, 0.004% basic dcV accuracy, and ultra-low reading noise. Combine that with scan rates of up to 450 channels/sec, and you've got the speed and accuracy you need to get the job done right the first time.

Built-in signal conditioning to get your job done

Whether you need to measure temperature, ac/dc volts, resistance, frequency, or current, the DAQ970A can handle it. The internal autoranging DMM directly measures 12 different functions, eliminating the need for expensive external signal conditioning. And our unique design allows complete per channel configurability for maximum flexibility and quick, easy set up. It's like having an independent, high-performance DMM behind each channel.

Standard connectivity to the PC

The DAQ970A has built-in Gigabit LAN and USB 2.0. With the standard LAN connections you also get the added benefit of a graphical Web interface for easy configuration of measurements and monitoring of results using a standard Web browser.

Convenient data storage with USB flash drive

The DAQ970A also features a built-in USB memory port so that you can use a USB flash drive to collect data without being connected to a PC. Data can be logged directly to the USB flash drive, extending your instrument's memory, or copied from internal memory for transfer to a computer in another location.



Virtual front panel control via Web interface

The built-in graphical Web interface provides easy access and control of the instrument using a Web browser such as Chrome and Internet Explorer. Using this interface you can configure measurements, define and execute scan lists, or monitor measurement results from anywhere on the network. Simply enter the instrument host name or IP address into the browser URL and gain access to the instrument's front panel capabilities.

- Specify per channel measurement configuration
- Define and execute switch scans
- Monitor measurement readings
- View and save data
- View error queue
- View instrument information like module configuration, relay counts, firmware revisions, and more

Additionally, since the Web interface is built into the instrument, you can access it on any operating system that supports a Web browser without having to install any special software.

Password protection and LAN lock out are also provided to limit access. The graphical Web interface makes it easy to configure measurements, set up and execute scans or troubleshoot your designs from anywhere on the network.

BenchVue DAQ software saves you time and money

Now you don't have to spend your valuable time writing or configuring software. Keysight BenchVue DAQ software gives you a familiar Microsoft Windows interface for test configuration and real-time data display and analysis.

Unequaled ease of use

From the simplified configuration to BenchVue DAQ, we put in extra time and energy so you don't have to. Simple things like on-module screw-terminal connectors, built-in thermocouple reference junctions, well-organized user documentation full of examples and hints, all add up to increased productivity, whether you use the instrument every day or only now and then.

Custom configurations that grow with you

Three module slots and seven switch/control modules allow you to customize the DAQ970A to meet your unique requirements. Buy only what you need—and add more modules later as your application grows.

Front Panel at a Glance



Label	Description
1	USB port
2	On/Standby switch with LED indicator
3	Display
4	Softkeys
5	Measurement operation menu (to control the initiation of the measurements)
6	Measurement configuration menu (to set parameters for measurements)
7	Knob
8	Cursor navigation keypad

Rear Panel at a Glance



Label	Description
1	Slot identifier (100, 200, 300)
2	External trigger input, alarm outputs, channel advance input, and channel close output
3	AC mains input
4	Instrument cable lock
5	LAN interface connector
6	Chassis ground screw
7	USB interface connector

The Keysight DAQ970A Offers Unequaled Versatility for Your Data Acquisition Applications

In the past, you had to make a choice. On the one hand, you could choose the simple operation and low cost of a data logger. On the other hand, you had the flexibility and higher performance of a modular data acquisition system. The Keysight DAQ970A Data Acquisition/System gives you the best of both worlds: a simple user interface with low per-channel cost, modular flexibility, standard connectivity and impressive measurement performance. Whether you're an R&D engineer working on characterizing your latest design, or a manufacturing engineer building a test system or troubleshooting a process, the DAQ970A Data Acquisition/System offers the best combination of price and measurement performance.

It's a data logger

Configured with a 20-channel relay multiplexer, the DAQ970A becomes a powerful, low-cost data logger for simple characterization applications. What's more, the DAQ970A with its LAN and USB interfaces is ideal for easy set up and control for data logging applications in remote locations.

It's a data acquisition front end

The DAQ970A is an automated test system with excellent measurement performance—it's got the accuracy, resolution, and speed you need. See page 10 for application information.

An easy-to-use data logger for monitoring and characterization applications

Data loggers are used to monitor multiple signals (temperature, voltage, etc.) over extended periods of time to identify irregularities. Example applications include environmental chamber monitoring, component inspection, benchtop testing, process troubleshooting, and temperature profiling.

The Keysight DAQ970A is easy to use for a multitude of data logging and monitoring applications, either stand-alone or with a computer. Its flexible, modular design makes it scalable from 20 to 120 channels, and lets you add actuator, digital I/O, and analog output channels for simple control. Its small size, ruggedized features and USB memory port on the DAQ970A make it perfect for portable applications. Use LAN and USB interfaces for simple connection to the PC and support of remote applications. The DAQ970A can be set up at remote locations and accessed through the Web interface on a network connection or through the USB port by copying instrument configurations and measurement data results to a USB flash drive.

Better measurements with fewer hassles

Tired of putting up with the mediocre measurement performance you get with most data loggers or plug-in data acquisition boards? The DAQ970A offers 6½ digits of resolution and 0.004% basic 1-year dcV accuracy.

Simplify your data gathering with Keysight BenchVue DAQ software

Do you want PC-based data logging capability, but don't want to spend hours programming? BenchVue DAQ software is the answer. This Windows-based application is designed to make it a snap to use your PC for gathering and analyzing measurements. Use it to set up your test, acquire and archive measurement data, and perform real-time display and analysis of the incoming measurements.

A familiar spreadsheet environment makes it easy to configure and control your tests. And a rich set of colorful graphics provides many options for analyzing and displaying your data—all with point-and-click ease. Set up multiple graphics using strip charts, histograms, bar and scatter charts, individual channel results, and more. And of course you can use BenchVue DAQ to easily move data to other applications for further analysis, or for inclusion in your presentations and reports.



And the DAQ970A measures and converts 12 different input signals:

- Temperature with thermocouples, RTDs, and thermistors
- dc and ac volts
- 2- and 4-wire resistance
- Frequency and period
- Capacitance and diode
- Strain

What's more, each channel is independently configurable. This means you can configure channel 1—for dcV, channel 2 for a K-type thermocouple, and channels 3 and 13 for a 4-wire RTD measurement—all on the same module, all in a single scan. For custom linear conversions, use the Mx+B scaling function on any channel. You can even display a custom engineering label like RPM or PSI to identify your measurement units.

Versatile alarms

Alarms are available on a per-channel basis as well. Enter a high limit, a low limit, or both. The DAQ970A compares each reading to its limits and flags any out-of-range measurements. You can assign one of four TTL alarm outputs to any input channel to trigger external alarm lights, sirens, or send a TTL pulse to your control system, all without a PC connected.

Scanning made simple

The DAQ970A automatically builds a scan list that includes all configured inputs (even digital inputs from the Keysight multi-function module) in ascending order by channel number. You can pace scans by setting the DAQ970A internal timer for automatic scanning at a specific interval, by manually pressing a front-panel button, or by sending a software command or external TTL trigger pulse.

Monitor any input

A special display mode monitors a selected input channel, continuously updating the display with new readings—even during a scan. Or, when using the DAQ970A with built-in LAN, the channels can be monitored over the network using the graphical Web interface. It's great for keeping an eye on a key input, or for troubleshooting your system before a test.

Non-volatile memory and USB flash drive adds convenience, portability

All readings are automatically time-stamped and stored in a nonvolatile 100 k reading memory—enough memory to hold more than a week's worth of data (20 channels scanned every five minutes). The nonvolatile memory holds your data even after power is removed, so you can use the DAQ970A to collect data at a remote location for later uploading to a PC. Or if you need even more memory, the DAQ970A USB port can be used to log data directly to a USB flash drive or to copy the data from the reading memory without being connected to a computer.

A powerful, flexible data acquisition system for automated test

The DAQ970A gives you the resolution, accuracy, repeatability, and speed you've come to expect from a Keysight data acquisition system. It provides the measurement muscle you need, along with signal routing and control capability, in a flexible, modular format that can grow and change to match your varied applications.

Powerful measurements

The internal 6½ digit DMM brings the power and performance of a world-class stand-alone DMM to the DAQ970A, but at a fraction of the cost and in a fraction of the space. It's as accurate as the best bench DMM available: 0.004% basic 1-year dcV accuracy, 0.06% basic 1-year acV accuracy, and 0.01% basic 1-year resistance accuracy. Our patented A-D technology offers incredible linearity (2 ppm of reading +1 ppm of range) along with 22 bits of real resolution. And since it is an integrating A/D, it provides excellent noise rejection as well—a nice change from noisy and sampling A/Ds. No more averaging lots of samples just to see the real data you wanted. And if you need high scan rates, the DAQ970A is capable of delivering fully converted measure-ments at speeds up to 450 ch/s.

The input section of the DMM is optically isolated and shielded from the DAQ970A earth-referenced circuitry and computer interface, offering up to 300 V of input isolation. This is important for reducing ground loop and common mode voltage errors associated with long wiring runs and floating measurement sources.

Data logging feature checklist

- From 1 to 120 channels of analog input
- Measurements include dc volts, ac volts, thermo-couple, thermistor and RTD temperature measure-ments, 2- and 4-wire Ohms, dc current, ac current, frequency, and period and capacitance
- 6½ digits (22 bits) of resolution with 0.004% basic 1-year dcV accuracy
- 100 k reading nonvolatile memory including time-stamp
- Scaling and alarms available on each channel
- Full-featured front panel for stand-alone configuration, troubleshooting, and data viewing
- BenchVue DAQ software for configura-tion and data analysis
- Nonvolatile storage for five complete instrument states
- Built-in LAN or USB interfaces to support remote data logging applications

Flexible functionality

The DMM is installed inside the chassis rather than in one of the slots, leaving all three mainframe slots free for switch and control modules. You can choose from eight different modules (see page 13) to get the precise functionality you need now—while giving you flexibility for future expansion.

The internal DMM gives you the flexibility to measure 12 types of inputs easily and inexpensively. The built-in signal conditioning and conversion routines turn raw inputs directly into real information. Each measurement channel is independently configurable, so you can set different measurement functions, scale factors and alarm limits, even on adjacent channels. Advanced measurement features such as offset compensation, variable integration time, and delay are also selectable on a per-channel basis.

Software drivers

Your months of test system software development time need not go to waste. Software drivers that support (C, C#, Visual Basic, Visual Studio), LAN and USB on the DAQ970A and SCPI programming language make integration even easier.

The functionality you need

We put a lot of thought into defining and designing the modules for the DAQ970A in order to cover a broad spectrum of switching and signal routing requirements with fewer modules. The result? Simplified ordering and easier configuration. And while we were at it, we improved performance and density. The DAQ970A modules can switch from microvolts to 300 volts, dc to 2 GHz, and with densities as high as 120 single-ended channels or 96 matrix crosspoints per frame. Plus, simple control capabilities like analog outputs, open collector digital outputs, and isolated Form-C relays for controlling higher-powered devices are available.

Easy scanning

The DAQ970A can easily scan with external instruments. It builds a scan list that includes all enabled low frequency multiplexer inputs. Scans are controlled with the external *channel advance* input, or with the front panel *Step* key.

Connect to the company network

With the LAN interface, the instrument is easily connected to the company network to collect measurement data to a central database, remotely access the instrument's set up, or monitor measurement data from anywhere on the network.

Get better measurements with built-in signal conditioning

The Keysight DAQ970A architecture offers advantages over other data acquisition solutions which rely on external or plug-in signal conditioning modules for handling functions other than dcV:

- Minimizes external wiring and the resultant potential for noise and errors to enter your system
- Reduces hidden costs and overall system cost by avoiding unnecessary cables, breakout boxes and signal conditioning elements
- Simplifies your configuration—for faster, easier setup—with fewer connections and components
- Takes the guesswork out of error analysis.
- Measurement accuracies are specified to include all system-related errors
- Improves reliability, with fewer interconnects and fewer parts that can fail

ATE feature checklist

- 3-slot cardcage with 6½ digit (22 bit) internal DMM 0.004% basic 1-year dcV accuracy; 0.06% acV accuracy
- Up to 120 single-ended measurements or 96 matrix crosspoints in a 3½" high, half-rack instrument
- Eight switch and control modules include low- frequency and RF multiplexers, matrix and actuation switches, digital input and output, analog output, and event recording
- Scan rates up to 450 ch/s
- Graphical Web interface to speed up test development and monitor tests remotely
- and National Instruments LabView
- Relay maintenance feature for system maintenance

Customize your Keysight DAQ970A with plug-in modules

A complete selection of plug-in modules gives you high quality measurement, switching, and control capabilities to choose from. Modules include both low-frequency and RF multiplexers, a matrix switch, a general-purpose switch, and a multifunction module that includes digital input/output, analog output, and totalizer capabilities. You can mix and match modules to get just the functionality you need right now—then change or add more channels later as your application grows.

Modules for the DAQ970A are designed to make your testing easier, faster, and more reliable. Here's how:

Higher throughput

Our unique architecture incorporates a high-performance microprocessor on each module, off loading the mainframe processor and minimizing backplane communications for faster throughput.

More channels in less space

Surface mount construction and a highly integrated design minimize the space required for relay drive and interface circuitry. High density on-module connectors save both board and connector space normally required by a terminal block. We use the latest technology to squeeze the most out of the remaining board space, giving you up to 40 single-ended channels in roughly the same space used by many data acquisition system terminal blocks.

Convenient connections

On-module screw-terminal connectors make wiring more convenient. Built-in strain relief cable routing and cable tie points keep your wiring secure and safe from accidental tugs and pulls. An internal analog bus routes signals from any of the low frequency multiplexers directly to the internal DMM, without the need for external connections.

Use the chart below to help you pinpoint the modules that meet your needs.

Keysight DAQ970A modules-at-a-glance selection guide

Model description	Type	Speed (ch/sec)	Max volts	Max amps	Bandwidth	Thermal offset	Comments	Page
DAQM900A 20 ch Multiplexer + 2 current channels	2-wire solid-state (4-wire selectable)	450	120 V	1 A	10 MHz	0 µV	Built-in cold junction reference 2 additional current channels (22 total)	19
DAQM901A 20 ch Multiplexer + 2 current channels	2-wire armature (4-wire selectable)	80	300 V	1 A	10 MHz	0 µV	Built-in cold junction reference 2 additional current channels (22 total)	21
DAQM902A 16 ch Multiplexer	2-wire reed (4-wire selectable)	250[1]	300 V	50 mA	10 MHz	< 4 µV	Built-in cold junction reference	21
DAQM903A 20 ch Actuator/GP Switch	SPDT/form C	120	300 V	1 A	10 MHz	< 1 µV		23
DAQM904A 4 x 8 Matrix	2-wire armature	120	300 V	1 A	10 MHz	< 1 µV		23
DAQM905A Dual 4 ch RF Mux 50 Ω	Common low (unterminated)	60	42 V	0.7 A	2 GHz	< 4 µV	1 GHz bandwidth through BNC-to-SMB adapter cable	24
DAQ970A Multifunction Module	Two 8-bit digital I/O ports		42 V	400 mA			Open drain	25
	26-bit event counter		42 V		100 KHz		Selectable input threshold	
	Two 16-bit analog outputs		±12 V	10 mA	dc		Max 40 mA total output per frame	
DAQ908A 40 ch Single-Ended Mux	1-wire armature (common low)	100	300 V	1A	10 MHz	< 1 µV	Built-in cold junction reference No four-wire measurements	21

[1] Up to 250 ch/sec to internal memory.
See scanning rates for measurement condition and rate on each instrument.

Keysight quality

We know you can't afford instrument downtime due to hardware failures and unscheduled maintenance. That's why our engineers designed reliability into the DAQ970A: A rugged enclosure, state-of-the-art surface mount construction throughout, reduced parts counts, and rigorous and thorough testing on all aspects of the product.

Take the guesswork out of relay maintenance

The DAQ970A uses our proprietary relay maintenance system to help you to predict relay end-of-life and avoid costly production line downtime. It automatically counts every individual switch closure and stores it in nonvolatile memory on each module. You can query the total number of cycles on any individual channel so you can schedule maintenance and avoid erratic end-of-life failures.

Spec interpretation guide

The following pages list the technical specifications for the Keysight DAQ970A Data Acquisition/System and its modules. The explanations and examples below are helpful in understanding how to interpret these specifications:

- Measurement accuracy is specified as percent of reading plus percent of range, where reading is the actual measured value and range is the name of the scale (1 V, 10 V, etc.)—not the full scale value (1.2 V, 12 V, etc.).
- DMM measurement accuracies include all switching errors. Switching errors are also listed separately in the module specifications section. Temperature measurement accuracies include ITS-90 conversion errors. The thermocouple accuracies include the reference junction error as well.
- Accuracies are listed as either 24-hour, 90-day, or 1-year specifications. This refers to the length of time since the instrument's last calibration. Use the specification that matches your calibration cycle. The 24-hour specifications are useful for determining short-term relative performance.

Example 1: Basic dcV accuracy

Calculate the accuracy of the following measurement:

9 V dc input
10 V dc range
1-year accuracy specifications
Normal operating temperature (18 - 28°C)



From the following page, the 1-year accuracy is:
0.0035% of reading + 0.0005% of range

Which translates into:
(0.0035/100 x 9 V)+ (0.0005/100 x 10 V) = 365 µV

For a total accuracy of:
365 µV/9 V = 0.0041%

Example 2: Extreme operating temperature

When the DAQ970A is used outside of its 18 - 28°C temperature range, there are additional temperature drift errors to consider. Assume the same conditions in Example 1, but at a 35°C operating temperature.

The basic accuracy is again:
0.0035% of reading + 0.0005% of range = 365 µV.

Now, multiply the 10 V temperature coefficient from the following page by the number of degrees outside of operating range for additional error:
(0.0005% reading + 0.0001% range)
/°C x (35 - 28°C) =
(0.0005% reading + 0.0001% range)
/°C x 7°C =
0.0035% reading + 0.0007% range = 385 µV
Total error is then:
365 µV + 385 µV = 750 µV or 0.008%

Example 3: Thermocouple measurement accuracy

Calculating the total thermocouple reading error is easy with the DAQ970A—just add the listed measurement accuracy to the accuracy of your transducer. Switching, conversion, and reference junction errors are already included in the measurement specification.

For this example, assume a J-type thermocouple input reading 150°C.

From the following page, total error is:
Thermocouple probe accuracy + 1.0°C
The probe vendor specifies accuracy of 1.1°C
or 0.4%, whichever is greater.

Total error is then:
1.0°C + 1.1°C = 2.1°C total, or 1.4%

Example 4: acV accuracy

The acV function measures the true RMS value of the input waveform, regardless of waveshape. Listed accuracies assume a sinewave input. To adjust accuracies for non-sinusoids, use the listed crest factor adder.

For this example, assume a ± 1 V square wave input with 50% duty cycle and a 1 kHz frequency.

Accuracy for 1 V, 1 kHz sinusoid is:
0.06% reading + 0.04% range
A 50% duty cycle squarewave has a crest factor of
Peak value / RMS value = 1 V / 1 V = 1
From crest factor table, add:
0.05% of reading
The total accuracy is:
0.11% of reading + 0.04% of range = 1.5 mV or 0.15%

DAQ970A Accuracy Specifications ±(% of reading + % of range)

Specifications: DC Voltage and resistance. Automatic calibration (ACAL) capable.

Range[3]	24 Hour[4] Tacal ± 1 °C	90 Days Tacal ± 5 °C	1 Year Tacal ± 5 °C	2 year Tacal ± 5 °C	Non ACAL Temperature Coefficient /°C[5]	With ACAL Temperature Coefficient /°C[6]
Accuracy ± (% of reading + % of range)[1]						
DC voltage[2]						
100 mV	0.0030 + 0.0050	0.0040 + 0.0060	0.0050 + 0.0060	0.0065 + 0.0060	0.0005 + 0.0005	0.0002 + 0.0005
1 V	0.0015 + 0.0006	0.0025 + 0.0006	0.0035 + 0.0006	0.0050 + 0.0006	0.0005 + 0.0001	0.0002 + 0.0001
10 V	0.0010 + 0.0003	0.0021 + 0.0004	0.0030 + 0.0004	0.0045 + 0.0004	0.0005 + 0.0001	0.0002 + 0.0001
100 V	0.0020 + 0.0006	0.0035 + 0.0006	0.0040 + 0.0006	0.0055 + 0.0006	0.0005 + 0.0001	0.0002 + 0.0001
300 V	0.0020 + 0.0020	0.0035 + 0.0020	0.0040 + 0.0020	0.0055 + 0.0020	0.0005 + 0.0001	0.0002 + 0.0001
Resistance[2, 7]						
100 Ω	0.0030 + 0.0050	0.0050 + 0.0060	0.0060 + 0.0060	0.0070+ 0.0060	0.0006 + 0.0005	0.0002 + 0.0005
1 KΩ	0.0020 + 0.0007	0.0030 + 0.0007	0.0040 + 0.0007	0.0050 + 0.0007	0.0006 + 0.0001	0.0002 + 0.0001
10 KΩ	0.0020 + 0.0005	0.0030 + 0.0005	0.0040 + 0.0005	0.0050 + 0.0005	0.0006 + 0.0001	0.0002 + 0.0001
100 KΩ	0.0020 + 0.0005	0.0030 + 0.0005	0.0040 + 0.0005	0.0050 + 0.0005	0.0006 + 0.0001	0.0002 + 0.0001
1 MΩ	0.0020 + 0.0005	0.0060 + 0.0005	0.0070 + 0.0005	0.0080 + 0.0005	0.0010 + 0.0002	0.0002 + 0.0002
10 MΩ	0.010 + 0.001	0.020 + 0.001	0.025 + 0.001	0.030 + 0.001	0.0030 + 0.0004	0.0030 + 0.0004
100 MΩ	0.100 + 0.001	0.250 + 0.001	0.350 + 0.001	0.400 + 0.001	0.1000 + 0.0001	0.0100 + 0.0001
1000 MΩ	2.000 + 0.001	2.500 + 0.001	3.500 + 0.001	4.000 + 0.001	1.0000 + 0.0001	0.1000 + 0.0001

1. Specifications are for 60-minute warm-up, integration setting of 10 or 100 NPLC, auto-zero on, AC slow filter. ACAL run within the last 2 days & 901 module connectivity.
2. These specifications include offset characteristics contributed by the 901 Module & backplane (which adds DCV + 2 uV, 4-wire ohms + 2 mΩ)
3. 20% over range on all ranges, except 300 VDC, 300 VAC, 1 ADC, 1 AAC, and diode test have 0%.
4. Relative to calibration standards. 24 hrs spec only applicable when calibrated with the same DAQM901 module that is being used to verify spec.
5. Add this for each °C outside the last ACAL ± 5 °C.
6. Add this for each °C outside the last external standards calibration ± 5 °C.
7. Specifications are for 4-wire ohms function or 2-wire ohms using math null for offset. Without math null, add 2 Ω additional error in 2-wire ohms function. The 100M and 1G ohm ranges are 2-wire only. See the manual for low power ohms specification and measurement currents.

DC Current and Other DC Functions					
Range[2]	24 Hour[3] Tacal 1 °C	90 Days Tacal 5 °C	1 Year Tacal 5 °C	2 year Tacal 5 °C	Temperature Coefficient /°C[5]
Accuracy ± (% of reading + % of range)[1]					
Characteristics - typical: DC current					
1 uA	0.017 + 0.005	0.040 + 0.005	0.050 + 0.005	0.060 + 0.005	0.0020 + 0.0010
10 uA	0.015 + 0.002	0.040 + 0.002	0.050 + 0.002	0.060 + 0.002	0.0015 + 0.0006
100 uA	0.012 + 0.001	0.040 + 0.001	0.050 + 0.001	0.060 + 0.001	0.0015 + 0.0004
Specifications: DC current					
1 mA	0.007 + 0.003	0.030 + 0.005	0.050 + 0.005	0.060 + 0.005	0.0015 + 0.0005
10 mA	0.007 + 0.020	0.030 + 0.020	0.050 + 0.020	0.060 + 0.020	0.0020 + 0.0020
100 mA	0.010 + 0.004	0.030 + 0.005	0.050 + 0.005	0.060 + 0.005	0.0020 + 0.0005
1A	0.050 + 0.006	0.070 + 0.010	0.080 + 0.010	0.100 + 0.010	0.0050 + 0.0010
Characteristics - Typical: Diode Test[4]					
5 V	0.002 + 0.010	0.008 + 0.010	0.010 + 0.010	0.012 + 0.020	0.0010 + 0.0010

Specifications: AC voltage

True RMS AC Voltage[6, 7]					
100 mV, 1 V, 10 V, and 100 V ranges					
3 Hz – 5 Hz	0.50 + 0.02	0.50 + 0.02	0.50 + 0.02	0.50 + 0.02	0.010 + 0.003
5 Hz – 10 Hz	0.10 + 0.02	0.10 + 0.02	0.10 + 0.02	0.11 + 0.02	0.008 + 0.003
10 Hz – 20 kHz	0.02 + 0.02	0.04 + 0.02	0.05 + 0.02	0.06 + 0.02	0.007 + 0.003
20 kHz – 50 kHz	0.05 + 0.03	0.06 + 0.03	0.07 + 0.03	0.08+ 0.03	0.010 + 0.005
50 kHz – 100 kHz	0.15 + 0.05	0.15 + 0.05	0.15 + 0.05	0.15 + 0.05	0.060 + 0.008
100 kHz – 300 kHz	1.00 + 0.1	1.00 + 0.1	1.00 + 0.1	1.00 + 0.1	0.200 + 0.020
300 V range					
3 Hz – 5 Hz	0.50 + 0.05	0.50 + 0.06	0.50 + 0.06	0.50 + 0.06	0.010 + 0.008
5 Hz – 10 Hz	0.10 + 0.05	0.10 + 0.06	0.10 + 0.06	0.11 + 0.06	0.010 + 0.008
10 Hz – 20 kHz	0.02 + 0.05	0.04 + 0.06	0.05 + 0.06	0.06 + 0.06	0.010 + 0.008
20 kHz – 50 kHz	0.05 + 0.09	0.06 + 0.09	0.07 + 0.09	0.08+ 0.09	0.010 + 0.0012
50 kHz – 100 kHz	0.15 + 0.15	0.15 + 0.15	0.15 + 0.15	0.15 + 0.15	0.060 + 0.020
100 kHz – 300 kHz	1.00 + 0.3	1.00 + 0.3	1.00 + 0.3	1.00 + 0.3	0.200 + 0.050
Specifications: True RMS AC current[7, 8]					
100 uA, 1 mA, 10 mA, 100 mA, 1 A ranges					
3 Hz – 5 kHz	0.07 + 0.04	0.09+ 0.04	0.10+ 0.04	0.10 + 0.04	0.015 + 0.006
5 kHz – 10 kHz (typical)	0.10 + 0.04	0.10 + 0.04	0.10 + 0.04	0.10 + 0.04	0.030 + 0.006

1. Specifications are for 60-minute warm-up, integration setting of 10 or 100 NPLC, auto-zero on, AC slow filter. ACAL run within the last 2 days & 901 module connectivity.
2. 20% over range on all ranges, except 300 VDC, 300 VAC, 1 ADC, 1 AAC, and diode test have 0%.
3. Relative to calibration standards. 24 hrs spec only applicable when calibrated with the same DAQM901 module that is being used to verify spec.
4. Specifications are for the voltage measured at the input terminals. The 1 mA test current is typical. Variation in the current source will create some variation in the voltage drop across a diode junction.
5. Add this for each °C outside Tcal ± 5 °C.
6. Specifications are for sinewave input >0.3% of range and > 1 mVrms. For the 300 Vrms range inputs >1% of range. All VAC ranges limited to 8 x 10^7 Volt–Hz.
7. Low-frequency performance: three filter settings are available: 3 Hz, 20 Hz, 200 Hz. Frequencies greater than these filter settings are specified with no additional errors.
8. Specifications are for sinewave input > 1% of range and > 10 µA AC.

Characteristics - typical: Capacitance					
Capacitance[7]					
1.0000 nF	0.50 + 0.50	0.50 + 0.50	0.50 + 0.50	0.50 + 0.50	0.05 + 0.05
10.000 nF	0.40 + 0.10	0.40 + 0.10	0.40 + 0.10	0.40 + 0.10	0.05 + 0.01
100.00 nF	0.40 + 0.10	0.40 + 0.10	0.40 + 0.10	0.40 + 0.10	0.05 + 0.01
1.0000 uF	0.40 + 0.10	0.40 + 0.10	0.40 + 0.10	0.40 + 0.10	0.05 + 0.01
10.000 uF	0.40 + 0.10	0.40 + 0.10	0.40 + 0.10	0.40 + 0.10	0.05 + 0.01
100.00 uF	0.40 + 0.10	0.40 + 0.10	0.40 + 0.10	0.40 + 0.10	0.05 + 0.01
Specifications: Frequency					
Frequency[1, 3]					
100 mV, 1 V, 10 V, 100 V, and 300 V ranges[3]					
3 Hz – 10 Hz	0.070	0.070	0.070	0.070	0.0002
10 Hz – 100 Hz	0.030	0.030	0.030	0.030	0.0002
100 Hz – 1 KHz	0.003	0.006	0.007	0.010	0.0002
1 KHz – 300 KHz	0.002	0.005	0.007	0.009	0.0002
Square wave[2]	0.001	0.004	0.006	0.008	0.0002
Additional frequency errors (% of reading)[1]					
Aperture (resolution/range)	**1 second**	**0.1 second**	**0.01 second**	**0.001 second**	
3 Hz – 40 Hz	0	0.100	0.160	0.160	
40 Hz – 100 Hz	0	0.030	0.160	0.160	
100 Hz – 1 KHz	0	0.020	0.200	0.200	
1 KHz – 300 KHz	0	0.004	0.030	0.240	
Square wave[2]	0	0.000	0.000	0.003	
Characteristics - typical: Temperature					
Thermocouple	**DAQ970A temp ranges**	**Probe[5]**	**Ref junction & DMM accuracy**	**Temp coefficient**	
E	–150 °C to 1000 °C		1.0 °C		
J	–150 °C to 1200 °C		1.0 °C		
K	–100 °C to 1200 °C		0.9 °C		
N	–100 °C to 1300 °C		1.0 °C		
R	300 °C to 1760 °C		0.5 °C		
T	–100 °C to 400 °C		0.9 °C		
Thermocouple	**DAQ970A extended temp ranges**	**Probe[5]**	**Ref junction & DMM accuracy**	**Temp coefficient**	
E	–200 °C to -150 °C		1.4 °C		
J	–210 °C to -150 °C		1.6 °C		
K	–200 °C to -100 °C		1.7 °C		
N	–200 °C to -100 °C		2 °C		
R	–50 °C to 300 °C		2.9 °C		
T	–200 °C to -100 °C		1.7 °C		
RTD		**Probe**	**DMM[6]**		
PT100 (DIN/IEC 751)		[4]	0.05 C		
Thermister					
2.2 K, 5 K, 10 K		[4]	0.1 C		
Other Measurement Functionality					
Strain					
Direct strain - measured as 2 or 4 wire ohms (customer enters gauge parameters)[4]					
Bridge strain - voltage measurement (1/4, 1/2 & full bridge, Bending & Poisson configurations, Requires external power supply & bridge completions)[4]					

1. Specifications are for sine wave input unless stated otherwise.
2. Square wave input specified for 10 Hz – 300 KHz for 1 second aperature. For shorter aperatures the minimun frequency requires > 2 cycles.
3. Input > 100 mV. For 10 mV to 100 mV inputs, multiply % of reading error x10. Amplitude 10%–120% of range except 30%–100% for the 300 ACV range. Specifications are for 1-second gate time (7-digits).
4. Accuracy specification depends on Mfg specifications of device.
5. Thermocouple probe accuracies would come from thermocouple supplier and should be selected based on temp ranges required.
6. DMM accuracy assumes measurement with DAQM901A. For 900 module Ohms measurements - see note 27.
7. Specifications are for using Math Null zeroing. High dissapation factor capacitors may show different results than a single frequency measurement. Film capacitors usually have lower dissapation factors than other dielectrics.

Switch Modules

	DAQM900A	DAQM901A	DAQM902A	DAQM903A	DAQM904A	DAQM905A	DAQM908A
General							
Number of channels	20	20 + 2	16	20 (SPDT)	4x8 (2 wire)	Dual 1x4(50 ohm)	40 (1 wire)
Scanning speed	450 Ch/s	80 ch/s	250 ch/s				100 ch/s
Open/close speed		120 ch/s	120 ch/s	120 Ch/s	120 ch/s	60 ch/s	70 ch/s
Internal DMM measurement functions supported							
Voltage AC/DC	Yes[3, 4]	Yes	Yes	No	No	No	Yes
Current AC/DC	No	Yes	No	No	No	No	No
Frequency/period	Yes	Yes	Yes	No	No	No	Yes
Ohms - 2 wire	Yes[2]	Yes	Yes[5]	No	No	No	Yes
Ohms - 4 wire	Yes[2]	Yes	Yes[5]	No	No	No	No
Thermocouple	Yes	Yes	Yes	No	No	No	No
RTD 2-wire	No	Yes	Yes	No	No	No	Yes
RTD 4-wire	No	Yes	Yes	No	No	No	No
Thermistor	Yes[1]	Yes	Yes	No	No	No	Yes
Capacitance	No	Yes	Yes	No	No	No	Yes
Characteristics - typical: Input							
Max voltage (dc, ac rms)	120V	300V	300 V	300 V	300 V	42 V	300 V
Max current (dc, ac rms)	.02 A	1 A	50 mA	1 A	1 A	.7 A	1 A
Power (W, VA)	2.4 W	50 W	2 W	50 W	50 W	50 W	50 W
Characteristics - typical: DC							
Offset voltage (incremental to DMM specs)	< 4 uV	0 uV [22.5]	< 4 uV	< 1 uV	< 1 uV	< 4 uV	< 1 uV
Offset resistance (4-wire) (incremental to the DMM specs)	< 4 mΩ	0 mΩ [22.5]	< 4 mΩ				
Initial closed channel R	< 50 ohms	< 1.0 ohms	< 1.0 ohms	< 0.2 ohms	< 1.0 ohms	< .5 ohms	< 1.0 ohms
Isolation Ch-Ch, Ch-Earth	> 10 G ohm	> 10 G ohm	> 10 G ohm	> 10 G ohm	> 10 G ohm	> 1 G ohm	> 10 G ohm
Characteristics - typical: AC							
Ch-Ch crosstalk (@ 1 Mhz)	NA	- 50 db	- 55 db	- 60db	- 50 db	-110 db	- 25 db
Capacitance (Hi-Lo)	NA	< 50 pF	< 65 pF	10 pF	< 50 pF	< 20 pF	< 50 pF
Capacitance (Lo-Earth)	NA	< 150 pF	< 135 pF	< 80 pF	< 80 pF	NA	< 80 pF
Volt-Hertz limit	10^8	10^8	10^8	10^8	10^8	10^10	10^8
Characteristics - typical: Other							
T/C CRJ accuracy							
Switch life (no load)	Unlimited within FET Banks[6]	100 M	100 M	100 M	100 M	5 M	100 M
Switch life (rated load)	Unlimited within FET Banks[6]	100 K	100 K	100 K	100 K	100 K	100 K

DAQM905A: Characteristics - Nominal	**10 Mhz**	**100 MHz**	**500 MHz**	**1 GHz**	**1.5 GHz**	**2 GHz**
AC						
Insertion loss (db)	-0.1	-0.4	-0.6	-1	-1.2	-3
SWR	1.02	1.05	1.2	1.2	1.3	1.4

1. DMM accuracy assumes measurement with DAQM901A. For 900 module Ohms measurements - see note 27.
2. The series resistance of the DAQM900A limits the use of the 100 ohm and 1kohm resistance range. The precision of 2 W ohms is limited by this on resistance. Keysight recommends the use of 4-wire ohms for these 2 ranges. Maximum resistance range of DAQM900A is 1 Mohm The 10M ohm and above ranges are not specified on this module.
3. For AC Volts - The input impedance of this module decreases with frequency. A source impedance of 5 ohms or less will maintain specifications over the full frequency range. A source impedance of 50 ohms or less will maintain specifications to 5 KHz.
4. For DC Volts - Additional settling time may be needed for short integration time and higher source impedance.
5. Resistance range beyond 1 MΩ is Typical
6. This module has an Armature backplane & 2 W/4 W relays with 100 M opearational life (FET life within banks is unlimited). Limiting backplane & 2 W/4 W relay cycling is recommended.

DAQM907A

Measurement Functionality	
Digital I/O (Port 1,2)	16 bits, Input or Output, non-isolated
Totalizer	100 kHz Input
Analog outputs	2 channels, ± 12 V or ± 24 mA
Characteristics - typical : [1, 2, 3, 4]	
DAC (output & readback)	Accuracy
Voltage	± 0.027% output + 4.4 mV
Current	± 0.115% of output + 4.4 uA
Characteristics - nominal	
DIO Port 1, 2	8 bit, input or output, nonisolated
Vin(L)	< 0.8 V (TTL)
Vin(H)	> 2.0 V (TTL)
Vout(L)	< 0.8 V @ Iout = -400 mA
Vout(H)	> 2.4 V @ Iout = 1 mA
Vin(H) max	< 42 V with external open drain pull-up
Alarming	Maskable pattern match or state change
Speed	4 ms (max) alarm sampling
Latency	5 ms (typical) to DAQ970A alarm output
Read/write speed	95/s
Max count	2^26 - 1
Totalize input	100 kHz (max) Rising or falling edge, programmable, min H or L time 5uS
Signal level	1 Vp-p (min) 42 Vpk (max)
Threshold	0 V or TTL, jumper selectable
Gate Input	TTL-Hi, TTL-Lo, or none
Count reset	Manual or Read + Reset
Read speed	85/s
DAC 1, 2	± 12 V or ± 24 ma nonisolated
Resolution	100uV, 0.2uA
Voltage mode current	15 mA max per channel
Current mode compliance	12 V
Settling time	1 ms to 0.01% of output

1. ACAL required within the last 30 days to achieve performance accuracies.
2. ACAL assumes ± 2C with no additional TC adders.
3. Mainframe DMM - calibrated through the 901 module.
4. Standard warrantied perforamance is 1 year, Tcal ± 5 °C

Characteristics - Nominal: Single Channel Reading Rates to I/O or Internal Memory		
	DAQ970A	DAQ970A
	Int. memory (100K)	LAN, USB
Single ch ASCII rdgs - DCV, Ohms	5000/s	5000/s
Single ch ASCII rdgs - ACV, ACI	50/s	50/s
Single ch ASCII rdgs - Freq, period	80/s	80/s
Single ch (chg Scale)	> 25/s	> 25/s
Single ch (chg Func)	> 12/s	> 12/s
Characteristics - Nominal: Scanning Measurement Rates to I/O or Internal Memory		
Scanning DCV or Ohms channels		
900A	450	450
901A	80	80
902A	250	250
902A (INIT, FETCh)	240	240
902A (MEAS)	240	240
902A (scale, alarm)	220	220
902A (Alt channel)	80	80
908A	80	80
Scanning ACV channels		
900A	90	90
901A	50	50
902A	90	90
908A	50	50
Scanning temperature - thermistor or TC channels		
900A	150	150
901A	50	50
902A	150	150
Scanning digital in TOTALIZER channels		
907A (Digital IN)	275	275
907A (Totalizer)	240	240
Characteristics - Nominal: Data out of Memory (FETCh of 50K readings)		
Single channel	**DAQ970A over USB**	**DAQ970A over LAN**
Readings	55000/s	120000/s
Rdgs (with timestamp)	35000/s	60,000/s
Rdgs (format option ON)	25000/s	50000/s

Characteristics - Measured: Noise performance for DC voltage, DC current, and resistance				
Integration time	**Digits[1]**	**RMS Noise adder (% of range + fixed base)[2]**		
		DC volts	**Ohms**	**DC current[3]**
100 PLC/1.67 s (2 s)	6.5	0	0	0
10 PLC/167 ms (200 ms)	6.5	0	0	0
1 PLC/16.7 ms (20 ms)	6.5	0.0001 + 0.5 uV	0.0001 + 0.5 mΩ	0.0006 + 0 .02 nA
0.2 PLC/3 ms (3 ms)	6.5	0.0005 + 3 uV	0.0010 +10 mΩ	0.0050 + 5 nA
0.06 PLC/1 ms (1 ms)	6	0.0020 + 3 uV	0.0020 + 10 mΩ	0.0070 + 10 nA
0.02 PLC/400 µs (300 µs)	6	0.0020 + 3 uV	0.0020 + 10 mΩ	0.0070 + 10 nA
0.006 PLC/100 µs (100 µs)	5	0.0050 + 4 uV	0.0050 + 10 mΩ	0.0100 +15 nA
0.002 PLC/40 µs (40 µs)	5	0.0090 + 4 uV	0.0080 + 10 mΩ	0.0250 +15 nA
0.001 PLC/20 µs (20 µs)	4.5	0.0180 + 8 uV	0.0150 + 10 mΩ	0.0250 + 30 nA

1. For DCV on the 10 volt range with zero volts input and auto zero on.
2. RMS noise adder measured with zero volts input and auto zero on.
3. The follow DCI ranges have these additional multipliers: The 10 mA by 5x, the 100 mA by 2x.

Characteristics - Measured: DC and AC Current Burden Voltage at Full Scale.	
DC current range	**Burden voltage**
1 µA	< 0.0011 V
10 µA	< 0.011 V
100 µA	< 0.11 V
1 mA	< 0.11 V
10 mA	< 0.027 V
100 mA	< 0.27 V
1 A	< 0.7 V

Characteristics - Measured: Internal DMM - Digitizing		
Sample rate: 50 KHz (Aperture = 20 uS)		
Sine wave input: Vpeak = Full scale of range		
Input frequency: 1 KHz		
Function: Range	**THD**	**BW (-3 db)**
DCV: 0.1, 1 V	75	15 KHz
DCV: 10 V	82	15 KHz
DCV: 100 V	60	15 KHz
DCI: 0.1, 1 mA	75	10 KHz
DCI: 10, 100 mA	75	10 KHz

Characteristics - Nominal: Other
A/D linearity: 0.0001% of reading + 0.0001% of range (measured)

General Characteristics

Line power	
Power supply (Mains supply voltage fluctuation is not allowed to exceed ± 10%)	100 - 240 VAC
Power line frequency	50/60/400 Hz
Power consumption	45 watts
Environment	
Operating environment	Full accuracy - 0 to 55 C
Operating humidity	Full accuracy to 80% R.H. at 40 °C non–condensing (Humidity degrades linearly to 50%RH at 55 °C non-condensing)
Operating altitude	up to 3,000 m
Storage temperature	-40 to +70 C
Mechanical	
Rack dimensions	212.6 mm x 88.5 mm x 348.3 mm
Bench dimensions	261.0 mm x 103.7 mm x 378.0 mm
Weight	4.1 kg
Regulatory	
Safety	EN 61010-1:2010 (3rd Edition) ANSI/ISA-61010-1 (82.02.01) Third Edition ANSI/UL 61010-1 Third Edition CAN/CSA-C22.2 No. 61010-1 Third Edition EN 61010-2-030:2010 (1st Edition) ANSI/ISA-61010-2-030 (82.02.03) First Edition ANSI/UL 61010-2-030 First Edition CAN/CSA-C22.2 No. 61010-2-030 First Edition Refer to Declaration of Conformity for current revisions Pollution Degree 2
EMC	IEC 61326 EN 61326 CISPR ICES-001 AS/NZS 2064.1 Refer to Declaration of Conformity for current revisions
Acoustic noise - Nominal	35 dBA
Triggering conditions	
External	Delay Jitter Minimum Pulse width Maximum rate
Voltmeter complete	Polarity
	Pulse width
Computer interfaces	LXI (rev 1.4) USB LAN
Language	SCPI-1999, IEEE-488 34970A/72A compatible
Front panel USB host port	USB 2.0 - high speed mass storage (MSC) class device Capability: Import/export instrument configuration files, save volatile readings and screen captures
Math Functions	
Display	
Real-time Clock	
Software available	IO Libraries: www.keysight.com/find/IOLibraries BenchVue: www.keysight.com/find/benchvue

Modules specifications

The Keysight DAQ970A accuracy specifications already include the switching offset and reference junction errors shown below. These errors are listed separately for determining system error with external measurement devices.

Up to three modules, in any combination, can be inserted into a single mainframe. The DAQ970A's internal DMM connections are accessible only through the 34901A, 34902A, and 34908A low-frequency multiplexers.

On-module screw terminals accept wire sizes from 16 gage to 22 gage. Twenty-gage wire is recommended for high channel count applications. The 34905A and 34906A RF Multiplexers use SMB connectors. A standard set of (10) BNC-to-SMB adapter cables is provided with each RF module for convenient BNC connections.

		Multiplexer				Actuator	Matrix	RF multiplexer	Multifunction
		DAQM900A	**DAQM901A**	**DAQM902A[1]**	**DAQM908A**	**DAQM903A**	**DAQM904A**	**DAQM905A**	**DAQM907A**
General									
Number of channels		20 + 2	20 + 2	16	40	20	4 x 8	Dual 1 x 4	See page 25 for module specifications
		2/4 wire	2/4 wire	2/4 wire	1 wire	SPDT	2 wire	50 Ω	
Connects to internal DMM			●	●	●				
Scanning speed		450 ch/s	80 ch/s	250 ch/s[1]	100 ch/s				
Open/close speed		120/s	120/s	120/s	70/s	120/s	120/s	60/s	
Input									
Voltage (dc, ac rms)[2]		120 V	300 V	300 V	300 V	300 V	300 V	42 V	
Current (dc, ac rms)		1 A	1 A	50 mA	1 A	1 A	1 A	0.7 A	
Power (W, VA)		50 W	50 W	2 W	50 W	50 W	50 W	20 W	
DC characteristics									
Offset voltage[3]		< 3 uV	< 3 uV	< 6 uV	< 3 uV	< 3 uV	< 3 uV	< 6 uV	
Initial closed channel R[3]		< 1 Ω	< 1 Ω	< 1 Ω	< 1 Ω	< 0.2 Ω	< 1 Ω	< 0.5 Ω	
Isolation ch-ch, ch-earth		> 10 GΩ	> 10 GΩ	> 10 GΩ	> 10 GΩ	> 10 GΩ	> 10 GΩ	> 1 GΩ	
Risetime		300 ps						< 300 ps	
Signal delay		< 3 ns						< 3 ns	
Capacitance	HI - LO	< 50 pF	< 50 pF	< 50 pF	< 50 pF	< 10 pF	< 50 pF	< 20 pF	
	LO - Earth	< 80 pF	< 80 pF	< 80 pF	< 80 pF	< 80 pF	< 80 pF	–	
Volt-Hertz limit		10^8	10^8	10^8	10^8	10^8	10^8	10^{10}	
Other									
T/C cold junction accuracy[3]									
	(typical)	0.8 °C	0.8 °C	0.8 °C	0.8 °C[8]				
Switch life	No load (typical)		100 M	100 M	100 M	100 M	100 M	5 M	
	Rated load (typical)[7]		100 k	100 k	100 k	100 k	100 k	100 k	
Temperature	Operating	all cards: 0 to 55 °C							
	Storage	all cards: –20 to 70 °C							
Humidity	(non-condensing)	all cards: 40 °C to 80% RH							

1. Not recommended for connection to ac line without external transient suppression. Up to 250 ch/s to internal memory. See scanning rates for measurement condition and rate on each instrument.
2. Channel-to-channel or channel-to-earth
3. Errors included in DMM measurement accuracy specifications
4. 50 Ω source, 50 Ω load
5. Bandwidth direct to card SMB connectors
6. Isolation within channel 1 to 20 or 21 to 40 banks is –40 dB
7. Applies to resistive loads only
8. Thermocouple measurements not recommended with 34908A module due to common lo configuration

Multiplexer selection guide

Choose between the broad functionality of the DAQM901A, the high speed scanning of the DAQM902A, or the DAQM900A solid-state module the single-ended density of the DAQ908A. These four modules are the only way to connect to the DAQ970A internal DMM. They can be used to scan with external instruments as well.

All multiplexer modules employ break-before-make scanning, ensuring only one closed channel (or channel pair) at a time.

	DAQM901A	DAQM901A	DAQM902A	DAQM908A
Number of channels	20 + 2	20 + 2	16	40
Max scan speed	80 ch/s	80 ch/s	250 ch/s	80 ch/s
Number of contacts	2 or 4	2 or 4	2 or 4	1
Temperature				
Thermocouple	●	●	●	●
2-wire RTD		●	●	●
4-wire RTD		●	●	
Thermistor		●	●	●
dc Volts	●	●	●	●
ac Volts	●	●	●	●
2-wire Ohms		●	●	●
4-wire Ohms		●	●	
Frequency	●	●	●	●
Period	●	●	●	●
dc current		●		
ac current		●		
capacitance		●		

DAQM900A 20-Channel FET multiplexer module

20-Channel General Purpose Multiplexer

- 450 ch/s scanning
- Two- and four-wire scanning
- Built-in thermocouple reference junction
- 120 V switching

The DAQM900A module is divided into two banks of 10 two-wire channels each. All 20 channels switch both HI and LO inputs, thus providing fully isolated inputs to the internal DMM or an external instrument. During 4-wire resistance measurements, channels from Bank A are automatically paired with channels from Bank B to provide the source and sense connections. The module has a built-in thermocouple reference junction to minimize errors due to thermal gradients when measuring thermocouples.



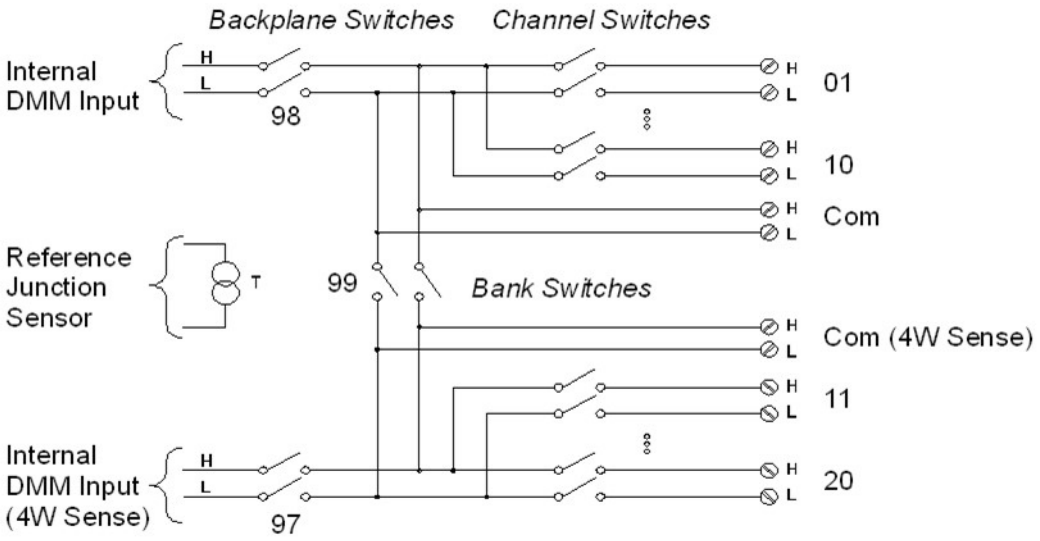

el pair) at a time.

DAQ901A

20-Channel General Purpose Multiplexer

- 80 ch/s scanning
- Two- and four-wire scanning
- Built-in thermocouple reference junction
- 300 V switching

The Keysight DAQM901A is the most versatile multiplexer for general purpose scanning. It combines dense, multifunction switching with 80-channel/second scan rates to address a broad spectrum of data acquisition applications.

Two- and four-wire channels can be mixed on the same module. Two additional fused inputs (22 channels total) route up to 1 A of current to the internal DMM, allowing ac and dc current measurements without the need for external shunt resistors.



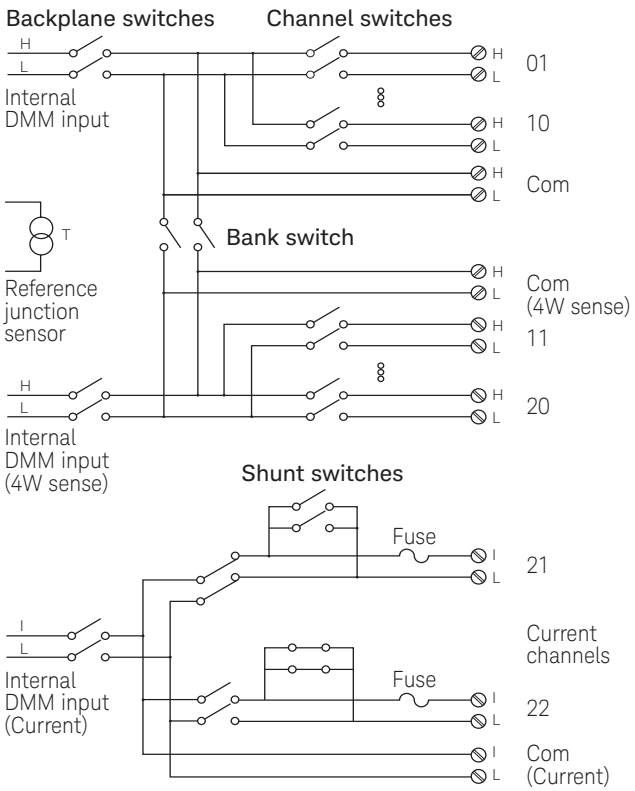

DSAQM902A

16-Channel High-Speed Multiplexer

- Scanning up to 250 ch/s
- Two- and four-wire scanning
- Built-in thermocouple reference junction

The Keysight DAQM902A employs reed relays to achieve scan rates up to 250 channels per second. Use this module for high-throughput automated test applications as well as high-speed data logging and monitoring tasks.

Sixteen two-wire inputs switch up to 300 V. Two- and four-wire channels may be mixed on the same module. User provided shunt resistors are required for current measurements.



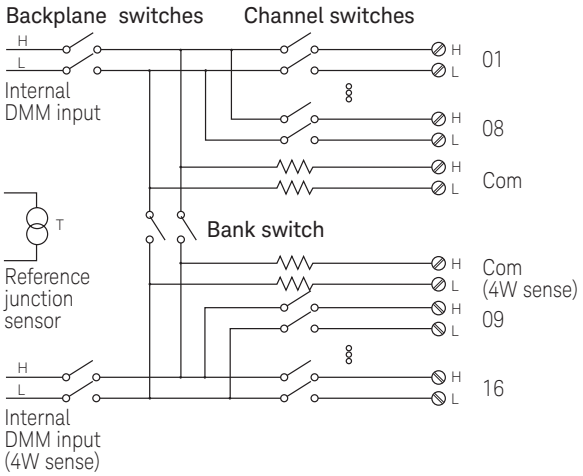

Note: Not recommended for connection to ac line without external transient suppression.

DAQM908A

- 40-Channel Single-Ended Multiplexer
- 80 ch/s scanning
- Single-wire switching for common low applications

Built-in thermocouple reference junction
Use the Keysight DAQM908A for the greatest density in common low applications, such as battery test, component characterization, and benchtop testing. Each module switches 40 one-wire inputs. All two-wire internal measurements except current are supported. The module low connection is isolated from earth and can float up to 300 V.

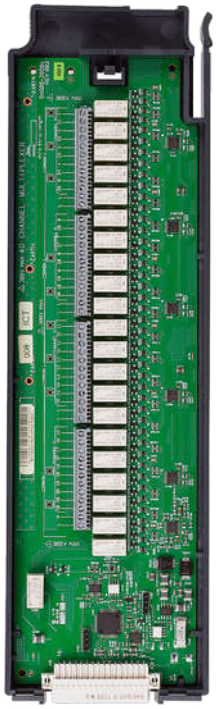

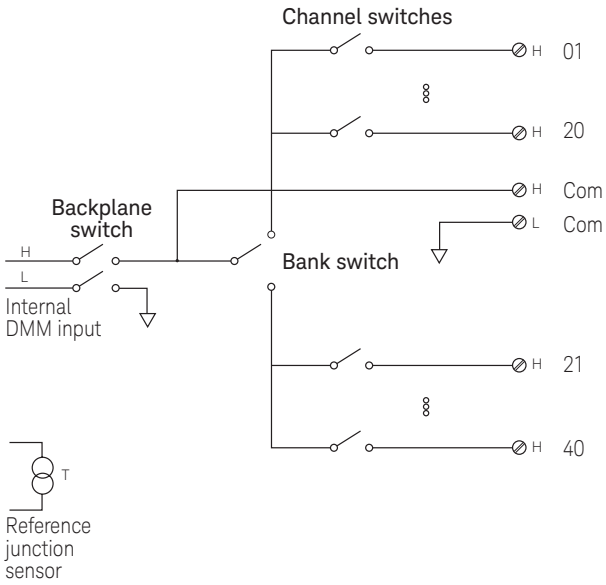

Note: Thermocouples must be electrically isolated from each other to avoid current loops and subsequent measurement errors.

DAQM903A

20-Channel Actuator/General Purpose Switch

- SPDT (Form C) latching relays
- 300 V, 1 A actuation and control

This general purpose switch module has 20 independent single-pole, double-throw (SPDT) relays. Use it to cycle power to products under test, control indicator and status lights, and to actuate external power relays and solenoids. Combine it with matrix and multiplexer modules to build custom switch systems. Its 300 V, 1 A contacts can handle up to 50 W, enough for many power line switching applications.

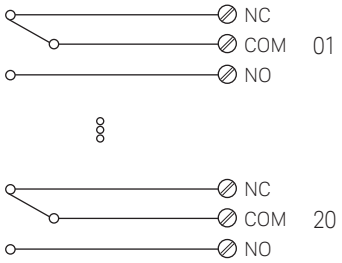

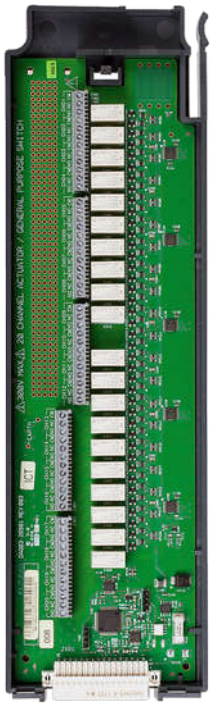

DAQM904A

4x8 Two-wire Matrix Switch

- 32 two-wire crosspoints
- 300 V, 1 A switching

The Keysight DAQM904A gives you the most flexible connection path between your device under test and your test equipment, allowing different instruments to be connected to multiple points on your DUT at the same time.

Rows or columns may be connected between multiple modules to build 8x8, 4x16 or larger matrices, with up to 96 crosspoints in a single frame.

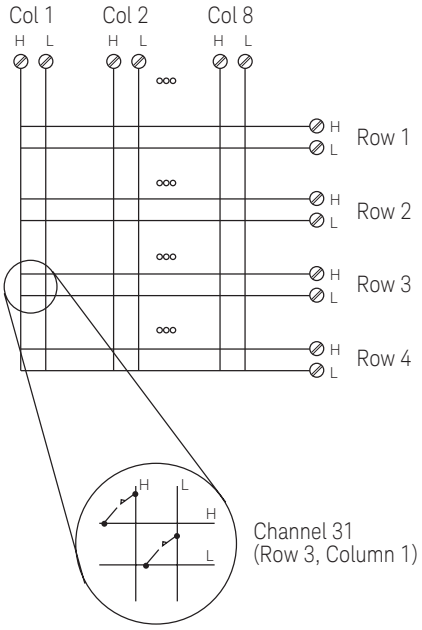

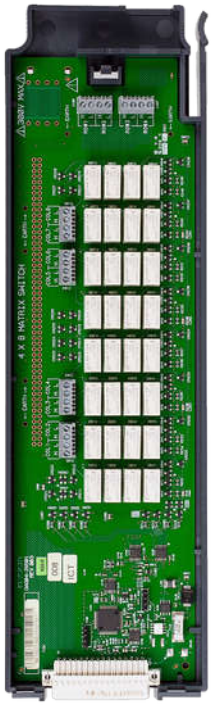

DAQM905A 50 Ω

Dual 4-Channel RF Multiplexer

- 2 GHz bandwidth
- BNC to SMB adapter cables included

The Keysight DAQM905A RF multiplexers offer broadband switching capabilities for high frequency and pulsed signals. Use them to route test signals between your device under test and your signal generator, oscillo-scope, spectrum analyzer, or other instrumentation.

The RF multiplexer are arranged as two independent 1x4 multiplexers, each with a common shield and a switched center conductor. Connections can be made directly to SMB inputs with 2 GHz usable bandwidth, or to the BNC-to-SMB adapters provided with 1 GHz bandwidth. Multiple banks may be cascaded together for applications requiring even larger topologies—create a 16:1 multiplexer in a single frame.

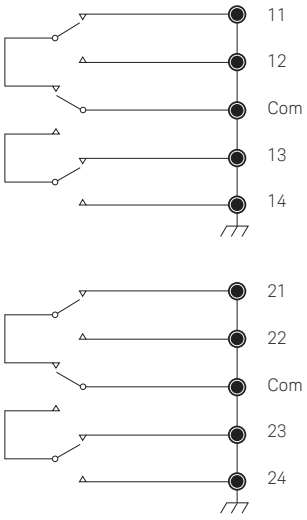

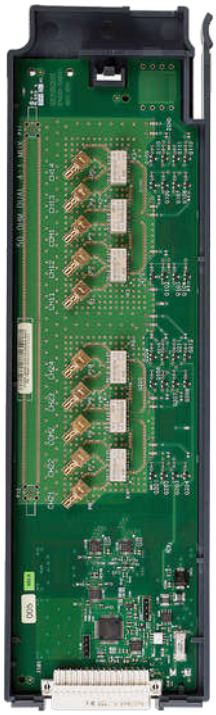

50 Ω MUX typical AC performance graphs

Insertion loss

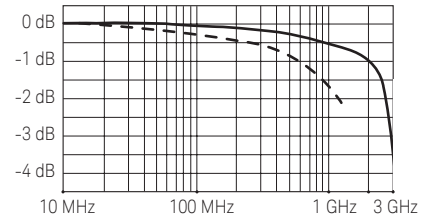

VSWR

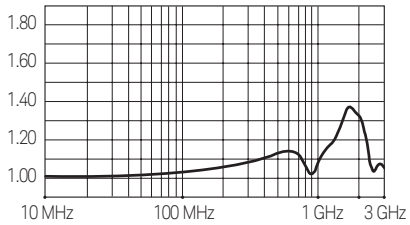

Crosstalk

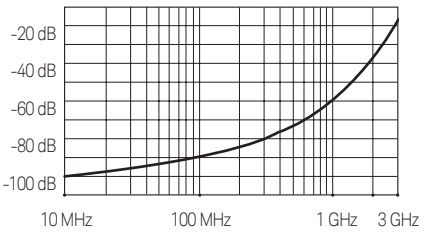

Direct to card

Using provided adapter cables

DAQM907A

Multifunction Module

- 16 bits of digital input and output
- 100 kHz totalizer input
- Two ±12 V analog outputs or ± 24 mA outputs

The Keysight DAQM907A allows great flexibility for a variety of sense and control applications. It combines two 8-bit ports of digital input and output, a 100 kHz gated totalizer, and two ± 12 V or ± 24 mA analog outputs—all on a single earth-referenced module. The digital inputs and totalizer input may be included in a scan. Alarm limits for the digital and event counter inputs are evaluated continuously, capturing and logging alarm conditions even between scans.

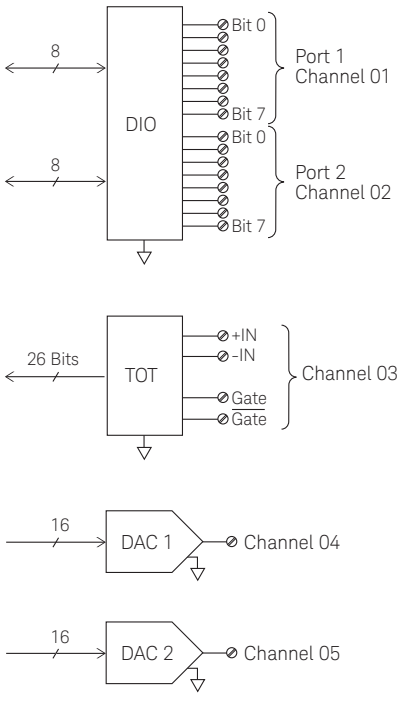



Digital input/ouput

Use the digital outputs with an external power supply to control microwave switches and attenuators, solenoids, power relays, indicators, and more. Use the digital inputs to sense limit switch and digital bus status. There are no complex handshake modes; reads and writes are initiated either from the front panel or the bus.

Port 1, 2	8 bit, input or output, nonisolated
Vin(L)	< 0.8 V (TTL)
Vin(H)	> 2.0 V (TTL)
Vout(L)	< 0.8 V @ Iout = –400 mA
Vout(H)	> 2.4 V @ Iout = 1 mA
Vin(H) max	< 42 V with external open drain pull-up
Alarming	Maskable pattern match or state change
Speed	4 ms (max) alarm sampling
Latency	5 ms (typical) to DAQ970A alarm output
Read/write speed	95/s

Totalize input

Count events from devices like photo interrupters, limit switches, and Hall-effect sensors.

It keeps an updated total which can be read via the front panel or programmatically at any time. With 26 bits of resolution, it can count events at full speed for nearly 11 minutes without an overflow.

Max count	2^{26} – 1
Totalize input programmable	100 kHz (max) Rising or falling edge,
Signal level	1 Vp-p (min) 42 Vpk (max)
Threshold	0 V or TTL, jumper selectable
Gate Input	TTL-Hi, TTL-Lo, or none
Count reset	Manual or Read + Reset
Read speed	85/s

Analog output

Use the two electronically calibrated analog outputs to source bias voltages to your device under test, to control your analog programmable power supplies, or use the outputs as setpoints for your control systems. The outputs are programmed directly in volts, either from the front panel or from the bus.

DAC 1, 2	± 12 V, nonisolated
Resolution	1 mV
IOUT	10 mA max
Settling time	1 ms to 0.01% of output
Accuracy	±(% of output + mV)
1 year ± 5 °C	0.25% + 20 mV
Temp. coefficient	±(0.015% + 1 mV)/°C

Rack mounting and dimensions

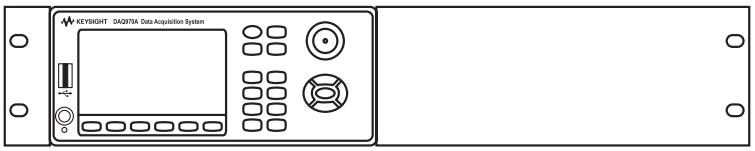

To rack mount a single instrument, order the adapter kit (part number: DAQA190A-FG).

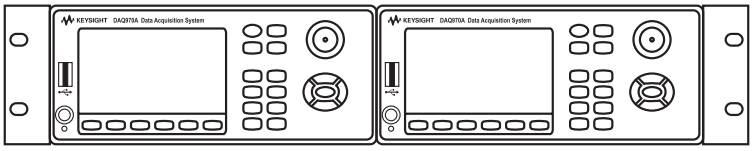

To rack mount two instruments side-by-side, order thelock-link kit (part number: DAQA194A-FG) and flange kit (part number: DAQA191A-FG).

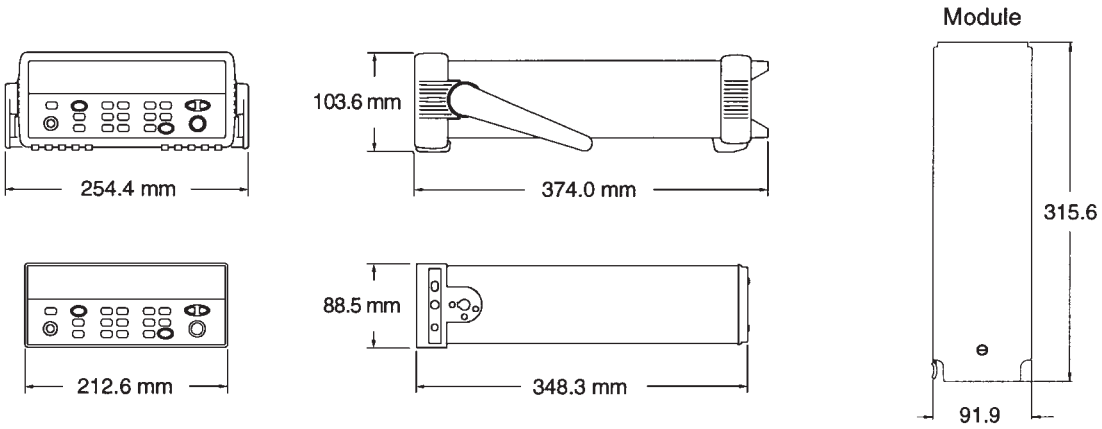

Ordering Information

Mainframe

DAQ970A	Data Acquisition/System Mainframe
Option A6J	ANSI Z540 compliant calibration

Modules

DAQM900A	20-Channel Solid-state multiplexer
DAQM901A	20-Channel armature multiplexer
DAQM902A	16-Channel reed multiplexer
DAQM903A	20-Channel actuator/general purpose switch
DAQM904A	4 x 8 Two-wire matrix switch
DAQM905A	Dual 4-Channel RF multiplexer, 50 Ohms
DAQM907A	Multifunction module
DAQM908A	40-Channel single-ended multiplexer

Accessories

11062A	Kelvin Clip Set
BV0006B	Data Acquisition App for instrument control and measurements, data graphing tools, logging measurements, and in depth analysis
34307A	10-pack of J-type thermocouples
34308A	5-pack of 10 kΩ thermistors
34161A	Accessory pouch
34131A	Hard carrying case (transit case)
34905-60001	Kit of 10 SMB-to-BNC adapter cables, 50 Ω
34906-60001	Kit of 10 SMB-to-BNC adapter cables, 75 Ω

To find more application notes are product demos see the product web pages at:

www.keysight.com/find/DAQ970A

Learn more at: www.keysight.com

For more information on Keysight Technologies' products, applications or services, please contact your local Keysight office. The complete list is available at: www.keysight.com/find/contactus

KEYSIGHT TECHNOLOGIES

This information is subject to change without notice. © Keysight Technologies, 2018, Published in USA, October 1, 2018, 5992-3168EN