Specifications

Eaton 283822

Catalog Number: 283822

Eaton xEnergy Light LV systems LV switchgear. Plinth H=100mm, W=425mm, D=400mm, gray

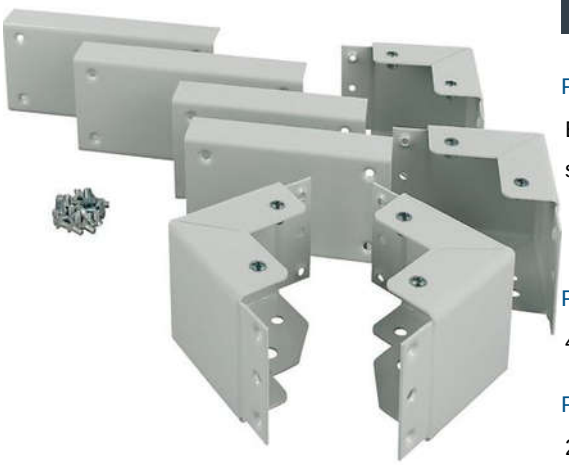

General specifications

Product Name
Eaton xEnergy Light LV systems LV switchgear

Catalog Number
283822

EAN
4015082838225

Product Length/Depth
400 mm

Product Height
110 mm

Product Width
230 mm

Product Weight
4.5 kg

Compliances
RoHS conform

Powering Business Worldwide

Product specifications

Used with

Accessory

Control centres XVTL

Type

Accessory

Control centres XVTL

Accessory/spare part type

Plinths

Color

Gray

Unit type

Accessories

Load capacity - max

1500 kg

RAL-number

7035

Suitable for enclosure building length/depth

400 mm

Suitable for enclosure building width

425 mm

Suitable for length/depth

400 mm

Suitable for width

425 mm

Material

Steel

Model

Base complete

Impact strength

IK10

Resources

Catalogs

eaton-pdd-xenergy-light-catalog-ca014022en-en-us.pdf

eaton-xenergy-light-add-on-distribution-board-product-catalog-2017-en-us.pdf



Eaton Corporation plc
Eaton House
30 Pembroke Road
Dublin 4, Ireland
Eaton.com

© 2024 Eaton. All Rights Reserved.

Eaton is a registered trademark.

All other trademarks are property of their respective owners.



Eaton.com/socialmedia