# PY9070

## Pressure sensor with display

PN-400-SE MFRKG/US/ /

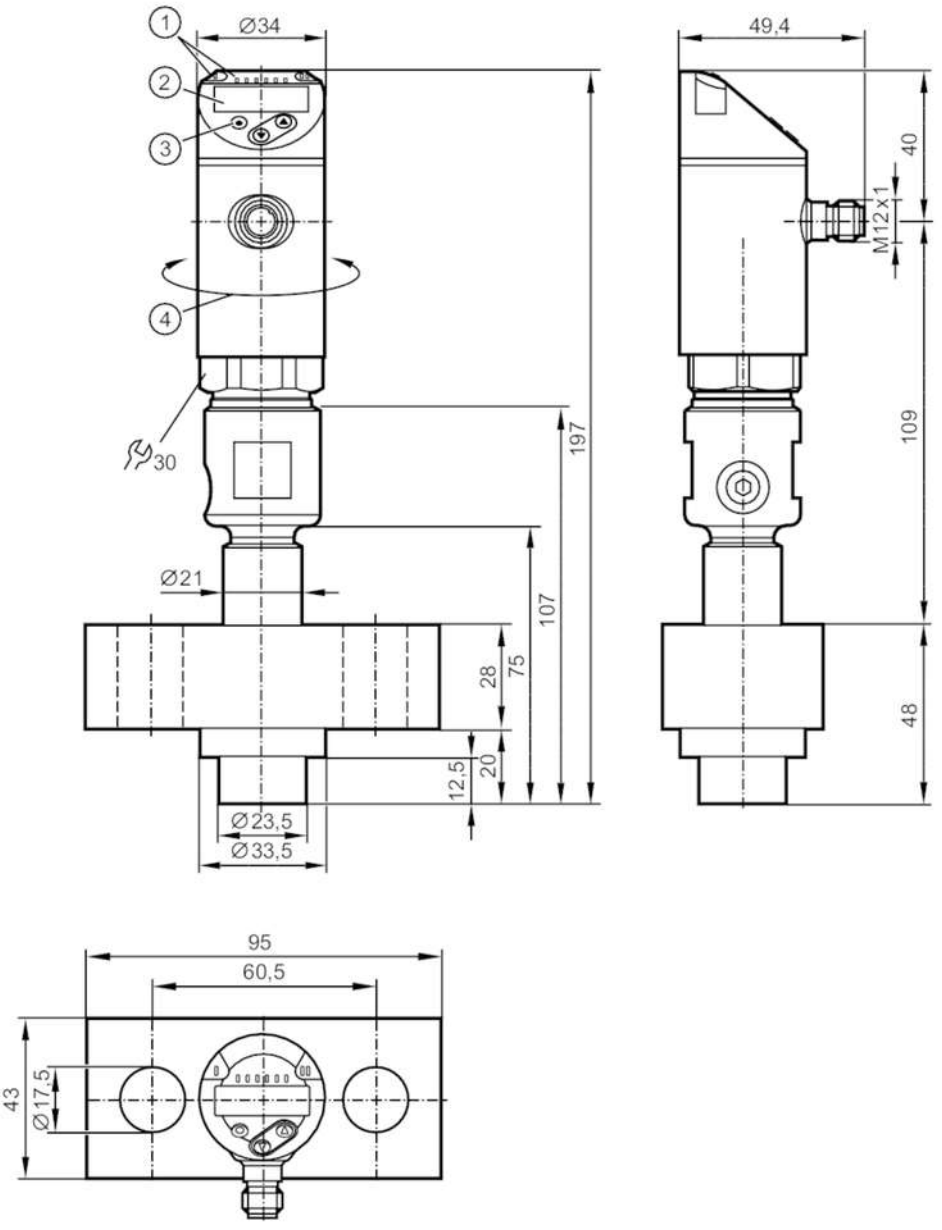


1 alphanumeric display 4-digit red/green
2 LEDs Display unit / switching status
3 programming button

CE EC 1935/2004 FCM FDA UKCA

| Product characteristics | | | |
|---|---|---|---|
| Number of inputs and outputs | Number of digital outputs: 2; Number of analogue outputs: 1 | | |
| Measuring range | 0...400 bar | 0...5800 psi | 0...40 MPa |
| Process connection | homogeniser connection | | |
| **Application** | | | |
| Special feature | Gold-plated contacts | | |
| Measuring element | diaphragm seal | | |
| Application | flush mountable for the food and beverage industry | | |

# PY9070

## Pressure sensor with display

PN-400-SE MFRKG/US/ /

| | | | | |
|---|---|---|---|---|
| Media | | liquids and gases | | |
| Medium temperature | [°C] | 5...125;  (150 maximum 1h) | | |
| Min. bursting pressure | | 1000 bar | 14500 psi | 100 MPa |
| Pressure rating | | 600 bar | 8700 psi | 60 MPa |
| Vacuum resistance | | -1000 mbar | -0.1 MPa | |
| Type of pressure | | relative pressure | | |
| **Electrical data** | | | | |
| Operating voltage | [V] | 18...30 DC;  (to SELV/PELV) | | |
| Current consumption | [mA] | < 35 | | |
| Min. insulation resistance | [MΩ] | 100;  (500 V DC) | | |
| Protection class | | III | | |
| Reverse polarity protection | | yes | | |
| Power-on delay time | [s] | 0.3 | | |
| Integrated watchdog | | yes | | |
| **Inputs / outputs** | | | | |
| Number of inputs and outputs | | Number of digital outputs: 2; Number of analogue outputs: 1 | | |
| **Outputs** | | | | |
| Total number of outputs | | 2 | | |
| Output signal | | switching signal; analogue signal; IO-Link;  (configurable) | | |
| Electrical design | | PNP/NPN | | |
| Number of digital outputs | | 2 | | |
| Output function | | normally open / normally closed;  (parameterisable) | | |
| Max. voltage drop switching output DC | [V] | 2 | | |
| Permanent current rating of switching output DC | [mA] | 250 | | |
| Switching frequency DC | [Hz] | < 500 | | |
| Number of analogue outputs | | 1 | | |
| Analogue current output | [mA] | 4...20; (scalable 1:5) | | |
| Max. load | [Ω] | 500 | | |
| Analogue voltage output | [V] | 0...10; (scalable 1:5) | | |
| Min. load resistance | [Ω] | 2000 | | |
| Short-circuit protection | | yes | | |
| Type of short-circuit protection | | pulsed | | |
| Overload protection | | yes | | |
| **Measuring/setting range** | | | | |
| Measuring range | | 0...400 bar | 0...5800 psi | 0...40 MPa |
| Set point SP | | 2.5...400 bar | 40...5800 psi | 0.25...40 MPa |
| Reset point rP | | 1...398.5 bar | 10...5780 psi | 0.1...39.85 MPa |
| Analogue start point | | 0...320 bar | 0...4640 psi | 0...32 MPa |
| Analogue end point | | 80...400 bar | 1160...5800 psi | 8...40 MPa |
| In steps of | | 0.5 bar | 10 psi | 0.05 MPa |
| **Accuracy / deviations** | | | | |
| Switch point accuracy | | < ± 0,4;  (Turn down 1:1) | | |

# PY9070

## Pressure sensor with display

PN-400-SE MFRKG/US/ /

| | | |
|---|---|---|
| [% of the span] | | |
| Repeatability [% of the span] | | < ± 0,1; (with temperature fluctuations < 10 K; Turn down 1:1) |
| Characteristics deviation [% of the span] | | < ± 1; (linearity, incl. hysteresis and repeatability; limit value setting to DIN EN IEC 62828-1) |
| Hysteresis deviation [% of the span] | | < ± 0,1; (Turn down 1:1) |
| Long-term stability [% of the span] | | < ± 0,05; (Turn down 1:1; per 6 months) |
| Temperature coefficient zero point [% of the span / 10 K] | | 0,2; (5...80 °C) |
| Temperature coefficient span [% of the span / 10 K] | | 0,2; (5...80 °C) |
| **Response times** | | |
| Response time [ms] | | < 1.5 |
| Delay time programmable dS, dr [s] | | 0...50 |
| Damping process value dAP [s] | | 0...4 |
| Damping for the analogue output dAA [s] | | 0...4 |
| Max. response time analogue output [ms] | | 3 |
| **Software / programming** | | |
| Parameter setting options | | hysteresis / window; normally open / normally closed; switch-on/ switch-off delay; Damping; Display unit; current/voltage output |
| **Interfaces** | | |
| Communication interface | | IO-Link |
| Transmission type | | COM2 (38,4 kBaud) |
| IO-Link revision | | 1.1 |
| SDCI standard | | IEC 61131-9 |
| Profiles | | Smart Sensor: Process Data Variable; Device Identification, Device Diagnosis |
| SIO mode | | yes |
| Required master port type | | A |
| Process data analogue | | 1 |
| Process data binary | | 2 |
| Min. process cycle time [ms] | | 2.3 |
| Supported DeviceIDs | **Type of operation** | **DeviceID** |
| | default | 459 |
| **Operating conditions** | | |
| Ambient temperature [°C] | | 5...80 |
| Storage temperature [°C] | | -40...100 |
| Protection | | IP 67 |
| **Tests / approvals** | | |
| EMC | DIN EN 61000-6-2 | |
| | DIN EN 61000-6-3 | |
| Shock resistance | DIN EN 60068-2-27 | 50 g (11 ms) |

# PY9070

## Pressure sensor with display

PN-400-SE MFRKG/US/ /

| | | | |
|---|---|---|---|
| Vibration resistance | | DIN EN 60068-2-6 | 10 g (10...2000 Hz) |
| **Mechanical data** | | | |
| Weight | [g] | 1479 | |
| Housing | | cylindrical | |
| Dimensions | [mm] | Ø 34 / L = 197 | |
| Materials | | stainless steel (630/1.4542/17-4 PH); stainless steel (316L/1.4404); stainless steel (316L/1.4435); PBT+PC-GF30; PBT-GF20; PC | |
| Materials (wetted parts) | | stainless steel (316L/1.4435) | |
| Min. pressure cycles | | 60 million; (at 1.2 times nominal pressure) | |
| Process connection | | homogeniser connection | |
| **Displays / operating elements** | | | |
| Display | | Display unit | 3 x LED, green (bar, psi, MPa) |
| | | switching status | 2 x LED, yellow |
| | | measured values | alphanumeric display, red/green 4-digit |
| **Remarks** | | | |
| Pack quantity | | 1 pcs. | |

**Electrical connection**

Connector: 1 x M12; coding: A; Contacts: gold-plated




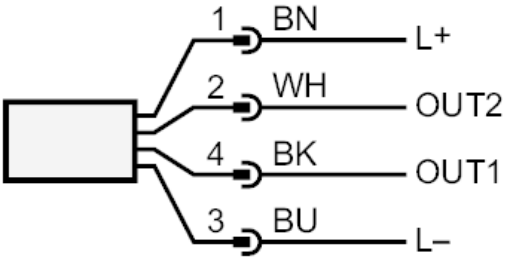


| | |
|---|---|
| OUT1 | switching output or IO-Link |
| OUT2 | switching output or analogue output |
| | colours to DIN EN 60947-5-2 |
| | Core colours : |
| BK = | black |
| BN = | brown |
| BU = | blue |
| WH = | white |