# SLN-94

- **up-down and down-up pulse counter**
- **settable activation threshold**
- **1 pulse counting input**
- **3 control inputs**
- **2 relay (or OC) outputs**

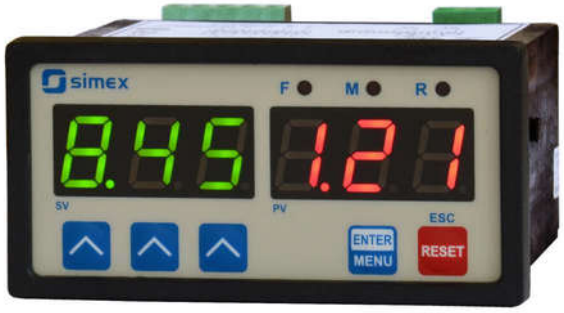


CE

A basic advantage of the **SLN-94** counters is an exceptionally easy setting change. The changing is performed by 3 buttons located under each decade of the SV threshold value display (green). The current value can be read on the PV display (red). Consequently, the counter operator is able to change the settings quickly and easily. The counting can be performed up-down or down-up, and the control is by means of the relay output.

- double LED display,
- batching function with 2 relay (or OC) outputs (rough and accurate batching),
- 4 counter reset sources,
- choice of a new counting cycle start,
- automatic reset option,
- programmable divider,
- programmable decimal point position,
- available with AC and DC power supply versions.

## Typical applications

1. Counting current amount of manufactured items, featuring production cycle control according to set parameters

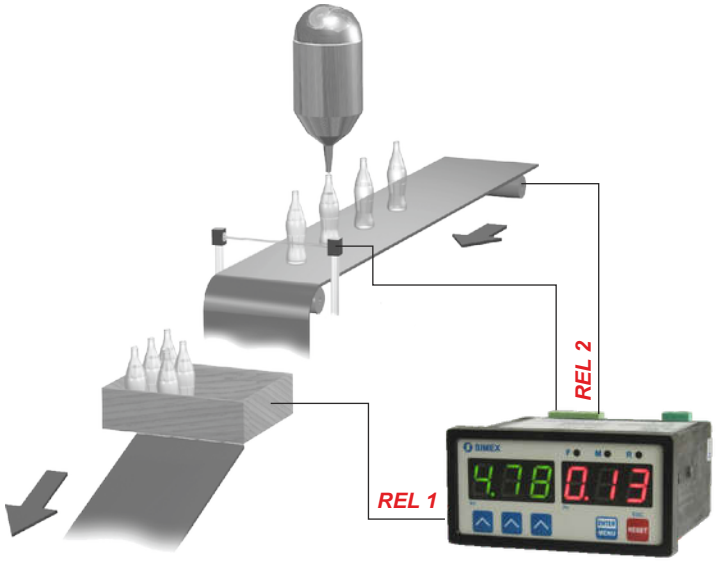


## Examplary pin assignment

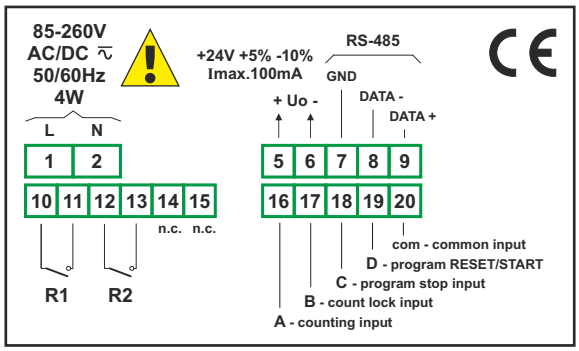


CE

## Technical data

**Power supply**: 19V ÷ 50V DC; 16V ÷ 35V AC or 85 ÷ 260V AC/DC, all separated
**Power consumption**: for 85 ÷ 260V AC/DC and 16V ÷ 35V AC power supply: max. 4,5 VA; 19V ÷ 50V DC power supply: max. 4,5 W
**Display**: result - LED, red, 3 digits, 13 mm high
settings - LED, green, 3 digits, 13 mm high
**Inputs**: pulse, galvanically insulated
A input - counting
B input - count lock
C input - program stop
D input - program RESET/START
COM - common
**Input levels**: low: 0 V ÷ 3 V
high: 10 V ÷ 30 V
**Max. input frequency**: electronic: 10 kHz
contact: max. 90 Hz (adjustable filter)
**Displayed values range**: from 000 to 999 (result and settings)
**Outputs**: 2 relays 1A/250V AC (cosφ=1) or the OC 30mA/30VDC/100mW
**Transducer power supply output:** 24V DC +5%, -10% / max. 100 mA, stabilized, not insulated from measuring inputs
**Communication interface**: RS-485, 8N1 and 8N2, 1200 bit/s ÷ 115200 bit/s, Modbus RTU (not galvanically insulated)
**Data memory**: non-volatile memory, EEPROM type
**Operating temperature**: 0°C ÷ +50°C (standard), -20°C ÷ +50°C (option)
**Storage temperature**: -10°C ÷ +70°C (standard), -20°C ÷ +70°C (with option **08**)
**Protection class**: IP 65 (front), available additional frame IP 65 for panel cut-out sealing; IP 20 (case and connection clips)
**Case**: board
**Case material**: NORYL - GFN2S E1
**Case dimensions**: 96 x 48 x 100 mm
**Panel cut-out dimensions**: 90,5 x 43 mm
**Installation depth**: min. 102 mm
**Board thickness**: max. 5 mm

## Ordering

**SLN-94-142X-1-X-XX1**

**options:**
**00** : no options
**01** : IP 65 frame
**08** : operating temp. -20°C ÷ +50°C

**power supply:**
**3** : 24V AC/DC
**4** : 85V - 260V AC/DC

**type of outputs:**
**1** : REL
**2** : OC



80-556 Gdańsk, Wielopole 7, POLAND, tel. (+48 58) 762-07-77, fax 762-07-70, www.simex.pl, e-mail: info@simex.com.pl