finder
SWITCH TO THE FUTURE

# YESLY Multifunction Electronic Relays

- Bathroom lighting control
- Bedroom light control
- Living room light control
- Office lighting control



13
SERIES

FINDER reserves the right to alter characteristics at any time without notice. FINDER assumes no liability for damage to persons or property, caused as a result of the incorrect use or application of its products.

**Multi and Single function electronic relays with Bluetooth**

**13.22 - Electronic multifunction relay 2 Pole**
- Round wall box (ie: Ø 60 mm) mounting
- 21 available functions (step relays, timer, staircase timer) for lighting and fan motor control

**13.72 - Electronic multifunction relay 2 Pole**
- Wall mounting, compatible with most popular Italian residential switch boxes: AVE, BTicino, Gewiss, Simon-Urmet, Vimar
- 21 available functions: step relays, timing (1s - 24h), electric shutter, blind or curtain control

**13.S2 - Electronic roller shutter actuator**
- Round wall box (ie: Ø 60 mm) mounting
- For electric shutter, blind or curtain control

- 2 contacts NO 6 A - 230 V AC independent and programmable channels
- 2 inputs for wired pushbuttons (one input per channel)
- Transmission range: approximately 10 m in free space and without obstacles

13.22/S2/72
Screw terminals



NOTE: with 110…125 V AC supply, the Ratings (AC1, AC15 and lamp loads) must be reduced by 50 % (e.g. 200 W instead of 100 W)

For outline drawing see page 8

NEW **13.22**

YESLY



- Offering a variety of ON/OFF functions associated with lighting and fan motor control
- Transmission protocol Bluetooth Low Energy (BLE)
- Safe connection with 128-bit encryption
- App programming with iOS or Android Smartphone: Finder TOOLBOX
- Can be managed through standard pushbuttons, BEYON and Type 013.B9 wireless buttons

NEW **13.72**

YESLY



- Offering a variety of ON/OFF functions associated with lighting, electric shutters, blinds or curtains
- Transmission protocol Bluetooth Low Energy (BLE)
- Safe connection with 128-bit encryption
- App programming with iOS or Android Smartphone: Finder TOOLBOX
- Can be managed through standard pushbuttons, BEYON and Type 013.B9 wireless buttons

NEW **13.S2**

YESLY



- Suitable for electric shutters, blind or curtain control
- Transmission protocol Bluetooth Low Energy (BLE)
- Safe connection with 128-bit encryption
- App programming with iOS or Android Smartphone: Finder TOOLBOX
- Can be managed through standard pushbuttons, BEYON and Type 013.B9 wireless buttons

| | | | | |
|---|---|---|---|---|
| **Contact specification** | | | | |
| Contact configuration | | 2 NO (DPST-NO) | 2 NO (DPST-NO) | 2 NO (DPST-NO) |
| Rated current/Maximum peak current | A | 6/40 | 6/40 | 6/40 |
| Rated voltage/ Maximum switching voltage | V AC | 230/— | 230/— | 230/— |
| Rated load AC1 | VA | 1380 | 1380 | 1380 |
| Rated load AC15 (230 V AC) | VA | 300 | 300 | 300 |
| Single phase motor rating (230 V AC) | W | 200 | 200 | 200 |
| Nominal lamp rating 230V: | | | | |
| incandescent/halogen | W | 200 | 200 | — |
| fluorescent tubes with electronic ballast | W | 200 | 200 | — |
| fluorescent tubes with electromagnetic ballast | W | 200 | 200 | — |
| CFL | W | 200 | 200 | — |
| LED 230 V | W | 200 | 200 | — |
| LV halogen or LED with electronic ballast | W | 200 | 200 | — |
| LV halogen or LED with electromagnetic ballast | W | 200 | 200 | — |
| **Supply specification** | | | | |
| Nominal voltage ($U_N$) | V AC (50/60 Hz) | 110…230 | 110…230 | 110…230 |
| | V DC | — | — | — |
| Rated power AC/DC | VA (50 Hz)/W | 2 / 0.5 | 2 / 0.5 | 2 / 0.5 |
| Operating range | AC (50 Hz) | (0.8…1.1)$U_N$ | (0.8…1.1)$U_N$ | (0.8…1.1)$U_N$ |
| | DC | — | — | — |
| **Technical data** | | | | |
| Electrical life at rated load in AC1 | cycles | $60 \cdot 10^3$ | $60 \cdot 10^3$ | $60 \cdot 10^3$ |
| Maximum impulse duration | | continuous | continuous | continuous |
| Dielectric strength between: open contacts | V AC | 1000 | 1000 | 1000 |
| Ambient temperature range | °C | –10…+50 | –10…+50 | –10…+50 |
| Protection category | | IP 20 | IP 20 | IP 20 |
| **Approvals** (according to type) | | CE UK CA | CE UK CA | CE UK CA |

**Bluetooth single channel multifunction relay**

**Type 13.21.8.230.B000**

- BLE communication protocol
- Round wall box (ie: Ø 60 mm) mounting
- 12 available functions
- Up to 8 scenarios
- Pushbutton Phase or Neutral connection

NEW **13.21.8.230.B000**

YESLY



13.21
Screw terminals



- 1 CO (SPDT) 16 A 250 V AC
- Bluetooth Low Energy (BLE) transmission protocol
- 128-bit encrypted connection
- Programmable via TOOLBOX App Finder compatible with iOS and Android operating systems
- It can be connected to wired buttons or to BEYON and 013B9 wireless buttons
- Recess mounting

For outline drawing see page 9

| | | |
|---|---|---|
| **Contact specification** | | |
| Contact configuration | | 1 CO (SPDT) |
| Rated current | A | 16 |
| Rated voltage/ Maximum switching voltage | V AC | 250 |
| Rated load AC1 | VA | 3600 |
| Rated load AC15 (230 V AC) | VA | 600 |
| Single phase motor rating (230 V AC) | W | 500 |
| Nominal lamp rating 230V: | | |
| incandescent/halogen | W | 1000 |
| fluorescent tubes with electronic ballast | W | 500 |
| fluorescent tubes with electromagnetic ballast | W | 350 |
| CFL | W | 300 |
| LED 230 V | W | 200 |
| LV halogen or LED with electronic ballast | W | 200 |
| LV halogen or LED with electromagnetic ballast | W | 500 |
| **Supply specification** | | |
| Nominal voltage ($U_N$) | V AC (50/60 Hz) | 110…230 |
| | V DC | — |
| Rated power AC/DC | V A (50 Hz)/W | 2.8 / 0.8 |
| Operating range | AC (50 Hz) | (0.8…1.1)$U_N$ |
| | DC | — |
| **Technical data** | | |
| Electrical life at rated load in AC1 | cycles | $50 \cdot 10^3$ |
| Maximum impulse duration | | continuous |
| Dielectric strength between: open contacts | V AC | 1000 |
| Ambient temperature range | °C | –10…+50 |
| Protection category | | IP 20 |
| **Approvals** (according to type) | | CE UK CA |



I-2022, www.findernet.com

## Ordering information

Example: Multifunction relay with YESLY Bluetooth.

| | | | | | | | | | | | | |
|---|---|---|---|---|---|---|---|---|---|---|---|---|
| | | | | | | | | A | B | C | D | |
| 1 | 3 | . | 7 | 2 | . | 8 | . | 2 | 3 | 0 | . B | 0 | 0 | 0 |

**Series**

**Type**
2 = YESLY - multifuction relay, wall box mounting
7 = YESLY - Multifunction relay compatible with the most popular Italian wall switch systems: AVE, BTicino, Gewiss, Simon-Urmet, Vimar
S = YESLY - Shutter/blind/curtain actuator, wall box mounting

**No. of poles**
1 = 1 pole 16 A
2 = 2 poles 6 A NO (SPST-NO)

**Supply version**
8 = AC (50/60 Hz)

**Supply voltage**
230 = 110…230 V AC

**A: Transmission protocol**
B = Bluetooth Low Energy (BLE)

0 = White
2 = Anthracite gray

**Codes / Supply voltage**
13.21.8.230.B000 110…230 V AC Yesly
13.22.8.230.B000 110…230 V AC Yesly
13.S2.8.230.B000 110…230 V AC Yesly
13.72.8.230.B000 110…230 V AC Yesly BLE white
13.72.8.230.B002 110…230 V AC Yesly BLE anthracite gray

## Technical data

| **Terminals** | | **13.72** | | **13.21 - 13.22 - 13.S2** | |
|---|---|---|---|---|---|
| Max. wire size | | solid cable | stranded cable | solid cable | stranded cable |
| | $mm^2$ | 1 x 6 / 2 x 4 | 1 x 4 / 2 x 2.5 | 1 x 2.5 / 2 x 1.5 | 1 x 2.5 / 2 x 1 |
| | AWG | 1 x 10 / 2 x 12 | 1 x 12 / 2 x 14 | 1 x 14 / 2 x 16 | 1 x 14 / 2 x 16 |
| Screw torque | Nm | 0.8 | | 0.5 | |
| Wire strip length | mm | 9 | | | |

| **Other data** | | **13.21** | **13.22 - 13.S2 - 13.72** |
|---|---|---|---|
| Power lost to the environment | | | |
| without contact current | W | 0.4 | 0.5 |
| with rated current | W | 2.2 | 1.5 |

| **EMC specifications** | | | |
|---|---|---|---|
| **Type of test** | | **Reference standard** | |
| Electrostatic discharge | contact discharge | EN 61000-4-2 | 4kV |
| | air discharge | EN 61000-4-2 | 8kV |
| Radiated electromagnetic field | (80…3000 MHz) | EN 61000-4-3 | 10 V/m |
| Fast transients (burst) (5-50 ns, 5 and 100 kHz) | on supply terminals | EN 61000-4-4 | 4kV |
| | on pushbutton connection | EN 61000-4-4 | 4kV |
| Voltage pulses on supply terminals (surge 1.2/50 µs) | differential mode | EN 61000-4-5 | 2kV |
| Radiofrequency common mode voltage (0.15…80 MHz) | on supply terminals | EN 61000-4-6 | 10 V |
| | on pushbutton connection | EN 61000-4-6 | 10 V |
| Voltage dips | 70% $U_N$, 40% $U_N$ | EN 61000-4-11 | 10 cycles |
| Short interruptions | | EN 61000-4-11 | 10 cycles |
| Radio frequency conducted emissions | 0.15…30 MHz | EN 55015 / ETSI EN 301489-1/301489-17 | Class B |
| Radiated emissions | 30…6000 MHz | ETSI EN 301489-1/301489-17 | Class B |

## Functions

### Relay settings

Multifunction electronic relays can be configured with the Finder TOOLBOX App, available for iOS or Android systems.
This product is ready-to-use preset with the factory setting (RI) Step relay on both channels.

| Type | Functions | |
|---|---|---|
| **13.21-B000**<br>**13.22**<br>**13.72** | 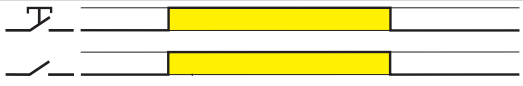 | **(RM) Monostable relay.**<br>On closure of the switch the output will close, and remain so, until the switch opens. |
| | 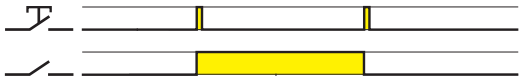 | **(RI) Step relay (pushbutton control).**<br>After every impulse, the output contact changes state - alternately switching from open to closed and vice versa. |
| |  | **(RIa) Step relay - lighting switch control (Type 13.22 and 13.21.8.230.B000 only).**<br>Each time a lighting switch is activated, the output contact changes state. The output state can also be changed using YESLY wireless pushbutton, a smartphone, or voice assistants. Ideal for converting a traditional lighting system using one, two, or four way switches, into a Smart system. (See page 9). |
| | 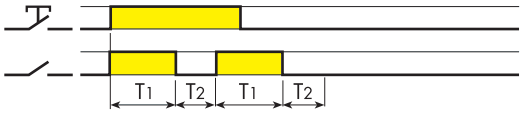 | **(LE) Asymmetric flasher (starting pulse on) with control signal.**<br>Power is permanently applied to the relay.<br>Closing Signal Switch (S) causes the output contacts to transfer immediately and cycle between ON (T1) and OFF (T2), until opened. |
| |  | **(DE) Interval with control signal on.**<br>Power is permanently applied to the relay.<br>On momentary or maintained closure of Signal Switch (S), the output contacts transfer, and remain so for the duration of the preset delay, after which they reset. |
| | 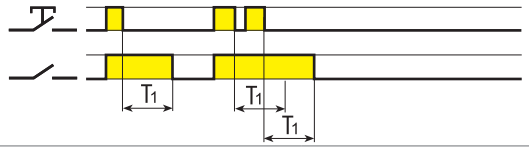 | **(BE) Staircase timer.**<br>On initial impulse the output contact closes and timing starts for the pre-set duration; subsequent impulses during the timing period will extend the timing period by the full pre-set value. On expiry of the time delay, the output contact opens. |
| | 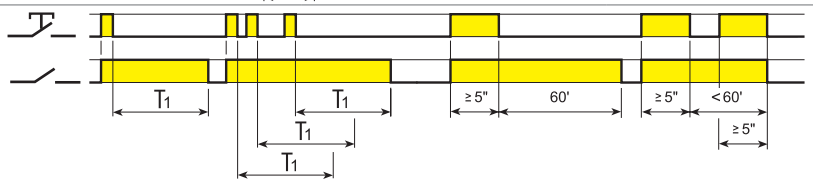 | **(ME) Staircase timer + Staircase maintenance.**<br>In addition to the Staircase timer function (BE), an impulse of ≥ 5 seconds will close the output contact for 60 minutes, after which time the contact will open. Ideal for maintenance or cleaning activities. The 60 minute timing can be interrupted by a further impulse of ≥ 5 seconds, when the output contact then opens. |
| | 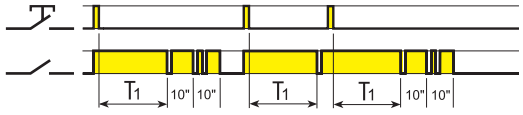 | **(BP) Staircase timer with switch off early warning.**<br>On initial impulse the output contact closes and the timing starts for the pre-set duration.<br>After the timing period, the output contact blinks off once; 10 seconds later the contact blinks off twice, and after a further 10 seconds the contact opens.<br>During the pre-set and 20 second warning time, it is possible, by a further impulse, to extend the time by the full pre-set value. |
| | 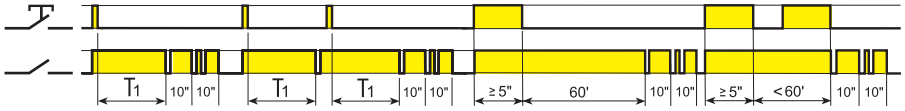 | **(MP) Staircase timer with switch off early warning + staircase maintenance.**<br>In addition to the Staircase timer function (BP), an impulse of ≥ 5 seconds will close the output contact for 60 minutes, after which time the output contact blinks off once;<br>10 seconds later the contact blinks off twice, and after a further 10 seconds the contact will open. Ideal for maintenance or cleaning activities.<br>The 60 minute timing can be interrupted by a further impulse of ≥ 5 seconds, when the output contact then opens. |



I-2022, www.findernet.com

## Functions

| Type | Functions | |
|---|---|---|
| **13.21-B000**<br>**13.22**<br>**13.72** | 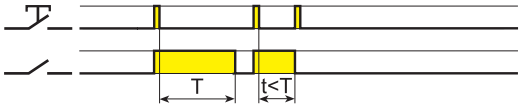 | **(IT) Timing step relay.**<br>On initial impulse the output contact closes and timing starts. On expiry of the time delay, the output contact opens. During the timing period it is possible to immediately open the contact with a further impulse. |
| | 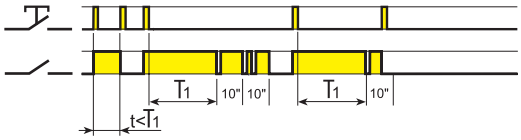 | **(IP) Timing step relay with switch off early warning.**<br>On initial impulse the output contact closes and timing starts. After the timing period, the output contact blinks off once; 10 seconds later the contact blinks off twice, and after a further 10 seconds the contact opens. During the pre-set and 20 second warning time, it is possible to immediately open the output contact by a further impulse. |
| | 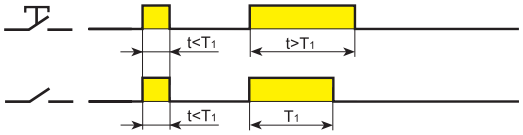 | **(FZ) Timing monostable.**<br>The output will be closed when the switch is closed, except where the switch is closed for greater than the preset time T1 - in which case the output contact opens. |
| **13.22**<br>**13.72** | 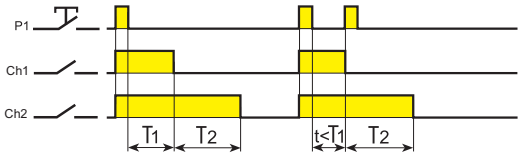 | **(VB) Bathroom light + fan.**<br>Channels Ch1 and Ch2 both close when the P1 command is pressed. At the expiry of T1 Ch1 opens and after a further delay of T2, Ch2 opens. Ch1 can be prematurely opened by another press of P1. |
| | 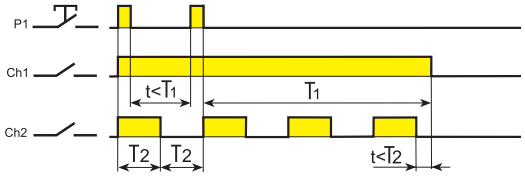 | **(CP) Ringbell + light.**<br>A press to P1 closes Ch1 for the pre-set time T1. While Ch1 is closed Ch2 executes a blinking function, at a rate set by T2. Subsequent presses to P1 extends the Ch1 closed time by re-triggering T1. |
| **13.S2**<br>**13.72** | 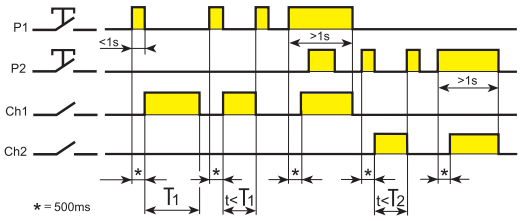 | **(TP) Roller shutter.**<br>A short press (<1 second) to P1 ("up" pushbutton) initiates a 500ms delay before Ch1 closes for time T1. Pressing P1 again within time period T1 will immediately open Ch1 contact. If P1 is closed for more than 1 second the Ch1 contact will open immediately P1 opens. The same operation applies to P2 and Ch2 contact, used to control the "down" function. |

## Sequences

**P1 (SET)**: press to advance through the sequence

**P2 (RESET)**: press to return to Step 1

| Type | Functions | Sequences | | | |
|---|---|---|---|---|---|
| | | 1 | 2 | 3 | 4 |
| 13.22<br>13.72 | 02 |  |  | | |
| | 03 |  |  | | |
| | 04 |  |  |  |  |
| | 05 |  |  |  |  |
| | 06 |  |  |  | |
| | 07 |  |  |  | |
| | 08 |  |  |  |  |

## Wiring diagrams

**Type 13.21.8.230.B000**
Wiring with pushbutton to phase

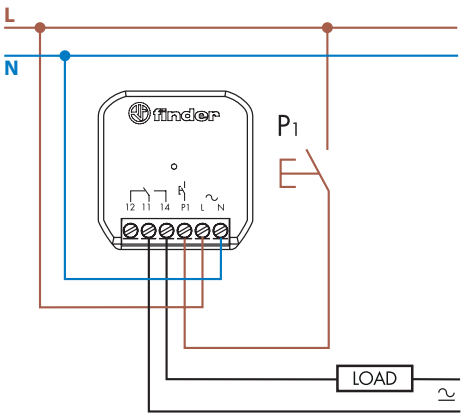


**Type 13.21.8.230.B000**
Wiring with pushbutton to neutral

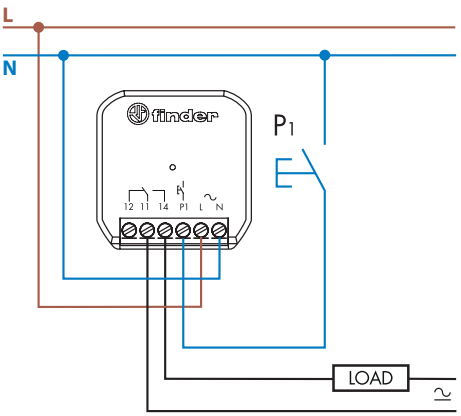


**Note: If the load is powered by a phase other than the one that powers the 13.21, a 50% reduction in the lamp capacity must be considered (set the "Different phase" function from the Toolbox Plus app).**

**Type 13.22**
4 wire connection

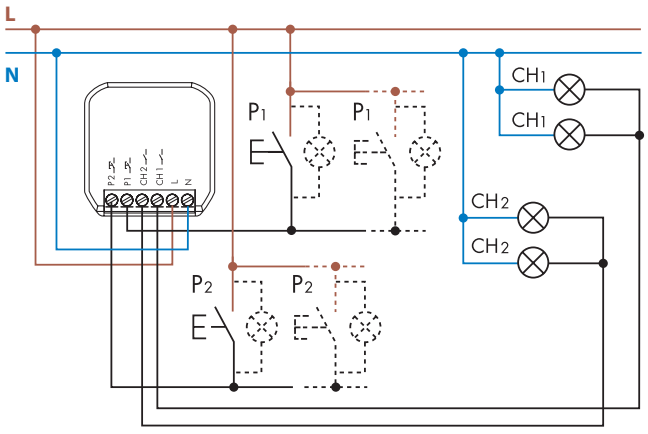


Maximum 5 (≤ 1 mA)
illuminated push buttons

**Type 13.S2**
4 wire connection

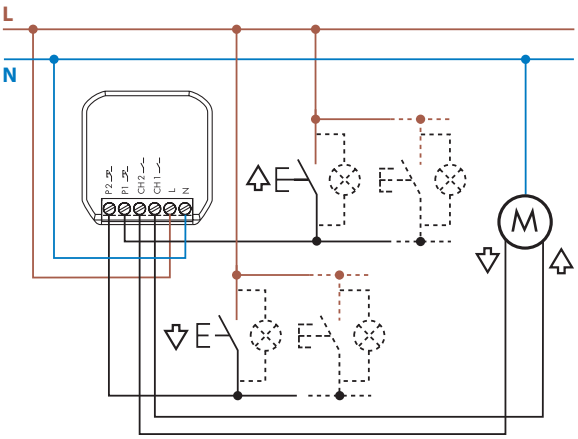


Maximum 5 (≤ 1 mA)
illuminated push buttons

**Type 13.72**
4 wire connection

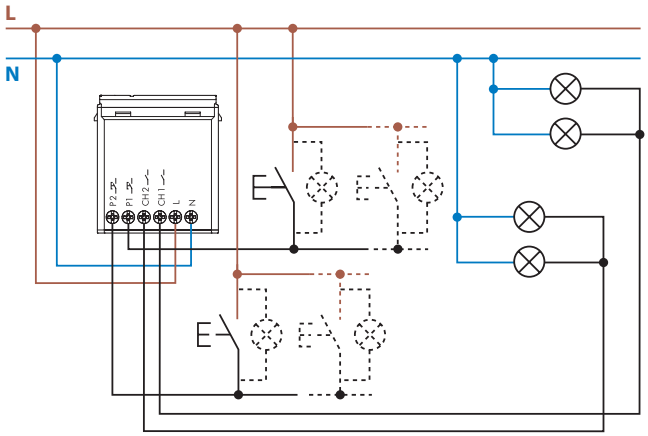


Maximum 5 (≤ 1 mA)
illuminated push buttons



I-2022, www.findernet.com

## Outline drawings

Type 13.72
Screw terminal

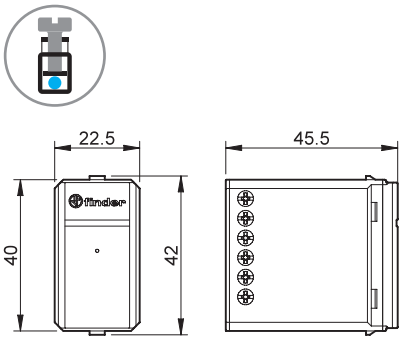


Types 13.21 / 13.22 / 13.S2
Screw terminal

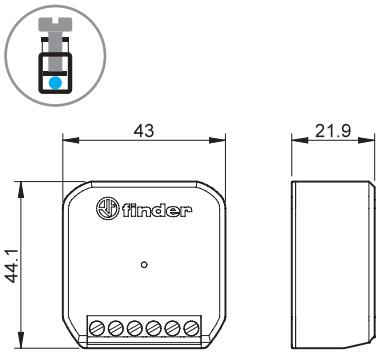


## Examples of applications

**Function TP - Roller Blinds, Shutters and Curtains**

**Type 13.72**

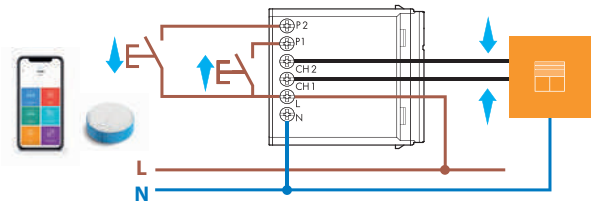


Ch1-P1: up
Ch2-P2: down

**Type 13.S2**

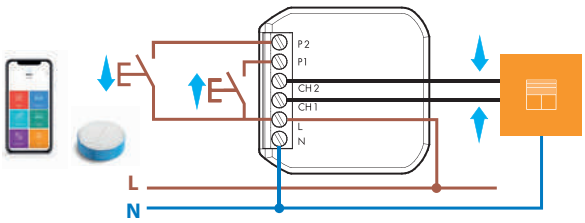


Ch1-P1: up
Ch2-P2: down

**Function VB – Bathroom light + fan**

**Type 13.72**

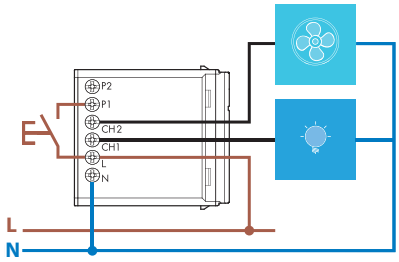


**Type 13.22**

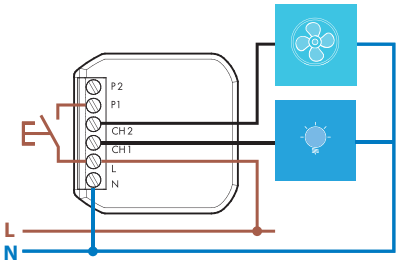


**Function CP – Ringbell + Lights**

**Type 13.72**

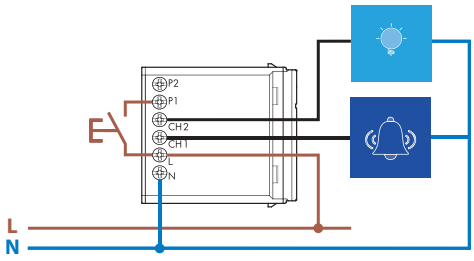


**Type 13.22**

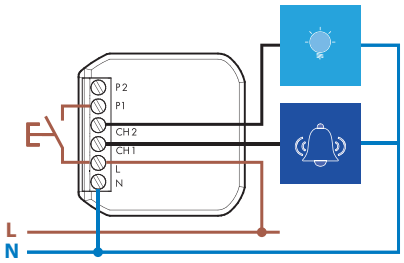


I-2022, www.findernet.com

## Examples of applications

**Type 13.21.8.230.B000 - Special function RIa - Step relay (switch control).**
**Ideal for converting a traditional lighting system using one, two, or four way switches, into a Smart system.**
**Any existing system can be made Smart with minimum change or disruption**

*The smart system can be controlled by: wireless buttons, smartphone and gateway*



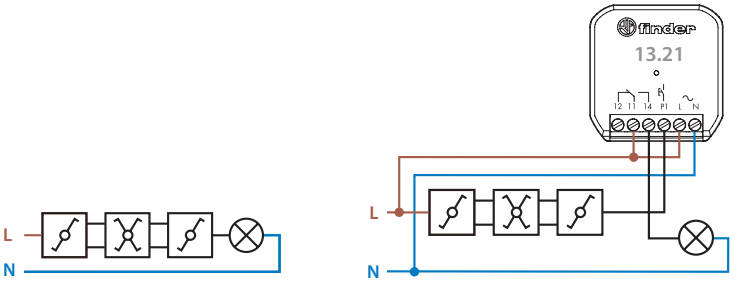


*Traditional installation* *A Smart installation*

**Type 13.22 - Special function RIa - Step relay (switch control).**
**Ideal for converting a traditional lighting system using one, two, or four way switches, into a Smart system.**

*The Smart system controls with just a momentary push to a wired, YESLY wireless or Smartphone pushbutton*



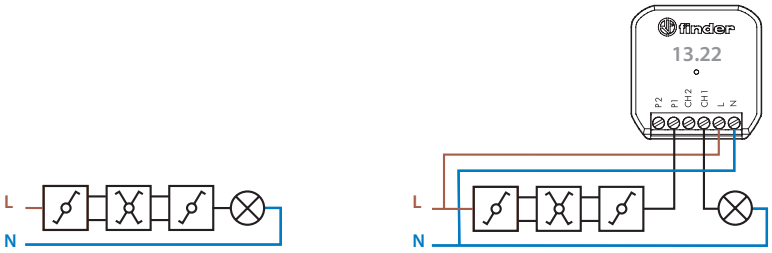


*Traditional installation* *A Smart installation*



I-2022, www.findernet.com

## Accessories



013.00

| | |
|---|---|
| **Pushbutton phase/neutral converter.** Use this with a pre-existing neutral wired pushbutton when retro fitting a device designed only for phase connected pushbuttons. This avoids any radical change to the existing wiring. | 013.00 |

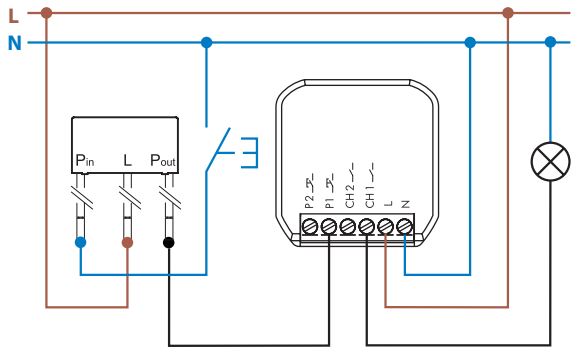


Application example with type 13.22



013.17

| | |
|---|---|
| **Adapter for DIN rail,** to install devices 13.22, 13.21, 13.S2 in the electrical panel. | 013.17 |

