PF2956

Flush pressure sensor

PF-2,5-REB34-MFRKG/US/ /P

phase-out article

Alternative articles: PM1506 + E30482
When selecting an alternative article and accessories please note that technical data may differ!

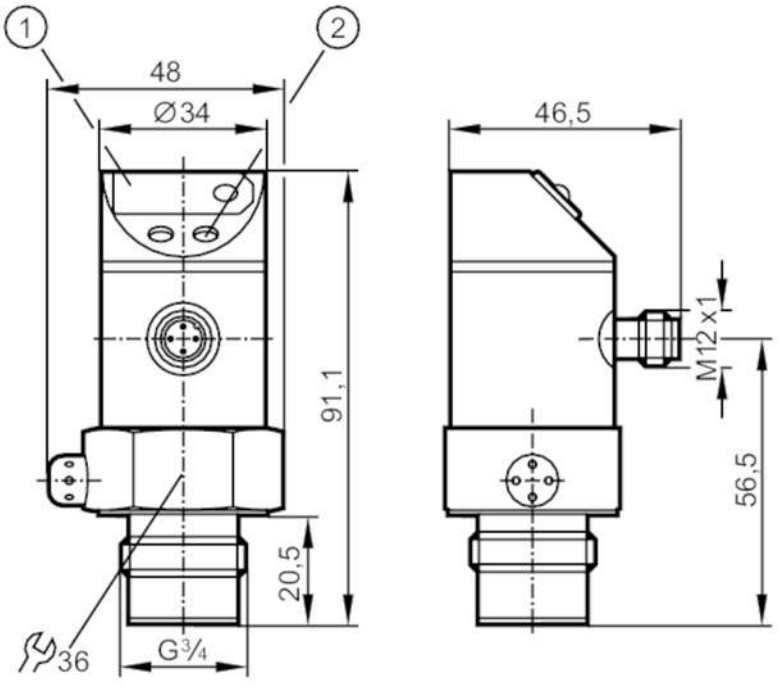

1 7-segment LED display
2 programming button

Product characteristics				
Number of inputs and outputs	Number of digital outputs: 2; Number of analogue outputs: 1			
Measuring range	-0.13...2.5 bar	-130...2500 mbar	-1.8...36.3 psi	-13...250 kPa
Process connection	threaded connection G 3/4 external thread			
Application				
Special feature	Gold-plated contacts			
Application	flush mountable for the food and beverage industry			
Installation	freely rotatable housing 350°			
Media	viscous media and liquids with suspended particles; liquids and gases			
Medium temperature [°C]	-25...80			
Min. bursting pressure	50 bar	725 psi	5000 kPa	
Pressure rating	20 bar	290 psi	2000 kPa	
Type of pressure	relative pressure			
No dead space	yes			
Electrical data				
Operating voltage [V]	20...30 DC			
Current consumption [mA]	< 60			

PF2956

Flush pressure sensor

PF-2,5-REB34-MFRKG/US/ /P

Min. insulation resistance	[MΩ]	100; (500 V DC)
Protection class		III
Reverse polarity protection		yes
Power-on delay time	[s]	0.2
Measuring principle		hydrostatic
Integrated watchdog		yes

Inputs / outputs

Number of inputs and outputs	Number of digital outputs: 2; Number of analogue outputs: 1

Outputs

Total number of outputs		2
Output signal		switching signal; analogue signal; (configurable)
Electrical design		PNP/NPN
Number of digital outputs		2
Output function		normally open / normally closed; (parameterisable)
Max. voltage drop switching output DC	[V]	2
Permanent current rating of switching output DC	[mA]	250
Switching frequency DC	[Hz]	< 170
Number of analogue outputs		1
Analogue current output	[mA]	4...20; (scalable 1:4)
Max. load	[Ω]	(Ub - 10 V) / 20 mA
Analogue voltage output	[V]	0...10; (scalable 1:4)
Min. load resistance	[Ω]	2000
Short-circuit protection		yes
Type of short-circuit protection		pulsed
Overload protection		yes

Measuring/setting range

Measuring range	-0.13...2.5 bar	-130...2500 mbar	-1.8...36.3 psi	-13...250 kPa
Set point SP	-0.11...2.5 bar	-1.6...36.3 psi		-11...250 kPa
Reset point rP	-0.12...2.49 bar	-1.7...36.2 psi		-12...249 kPa
Analogue start point	-0.13...1.88 bar	-1.8...27.2 psi		-13...188 kPa
Analogue end point	0.5...2.5 bar	7.3...36.3 psi		50...250 kPa
In steps of	0.01 bar	0.1 psi		1 kPa
Factory setting		SP1 = 0.63 bar		rP1 = 0.58 bar
		ASP = 0.00 bar		AEP = 2.50 bar

Accuracy / deviations

Repeatability	[% of the span]	< ± 0,1; (with temperature fluctuations < 10 K; Turn down 1:1)
Characteristics deviation	[% of the span]	< ± 0,6; (Turn down 1:1 , linearity, incl. hysteresis and repeatability , limit value setting to DIN EN IEC 62828-1)
Linearity deviation	[% of the span]	< ± 0,5; (Turn down 1:1)
Hysteresis deviation	[% of the span]	< ± 0,1; (Turn down 1:1)
Long-term stability		< ± 0,1; (Turn down 1:1; per year)

PF2956

Flush pressure sensor

PF-2,5-REB34-MFRKG/US/ /P

[% of the span]			
Temperature coefficient zero point [% of the span / 10 K]		< ± 0,1; (0...80 °C)	
Temperature coefficient span [% of the span / 10 K]		< ± 0,2; (0...80 °C)	
Response times			
Response time	[ms]	< 3	
Damping process value dAP	[s]	0...4	
Damping for the analogue output dAA in steps	[s]	0 - 0,1 - 0,5 - 2	
Max. response time analogue output	[ms]	3	
Software / programming			
Parameter setting options		hysteresis / window; normally open / normally closed; switching logic; current/voltage output; Damping; adaptation of displayed values; display can be rotated and switched off; Display unit; zero point; span	
Operating conditions			
Ambient temperature	[°C]	-25...80	
Storage temperature	[°C]	-40...100	
Protection		IP 67	
Tests / approvals			
EMC		EN 61000-4-2 ESD	4 kV CD / 8 kV AD
		EN 61000-4-3 HF radiated	10 V/m
		EN 61000-4-4 Burst	2 kV
		EN 61000-4-6 HF conducted	10 V
Shock resistance		DIN IEC 68-2-27	50 g (11 ms)
Vibration resistance		DIN IEC 68-2-6	20 g (10...2000 Hz)
MTTF	[years]	170	
Mechanical data			
Weight	[g]	268.9	
Housing		cylindrical	
Dimensions	[mm]	Ø 34 / L = 91.1	
Materials		stainless steel (316L/1.4404); PBT; PC; PEI; EPDM/X; FKM	
Materials (wetted parts)		ceramics (99.9 % Al2O3); stainless steel (316L/1.4435); surface characteristics: Ra < 0,4 / Rz 4; FKM; PTFE	
Min. pressure cycles		100 million	
Process connection		threaded connection G 3/4 external thread	
Displays / operating elements			
Display		switching status	2 x LED, red
		function display	7-segment LED display
		measured values	7-segment LED display
Display unit		bar; psi; kPa	
Remarks			
Notes		phase-out article	
Pack quantity		1 pcs.	

PF2956

Flush pressure sensor

PF-2,5-REB34-MFRKG/US/ /P

Electrical connection

Connector: 1 x M12; coding: A; Contacts: gold-plated



Connection

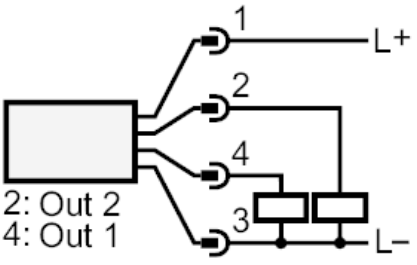

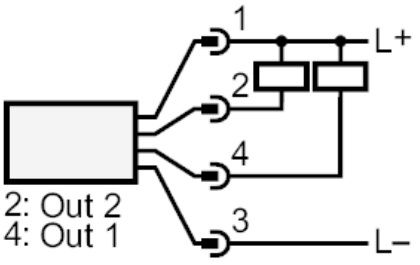

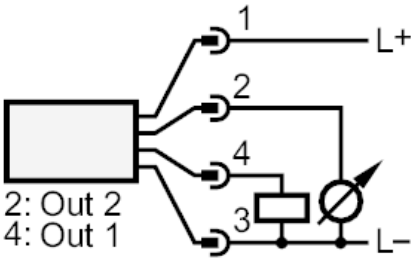

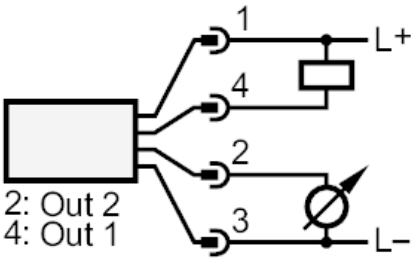

OUT1	switching output
OUT2	switching output analogue output