Brand of NTN Group

Technical data

EX309G2

Insert bearings



Spherical outer diameter, fixing by eccentric locking collar, seal with slinger

VISUAL (S)

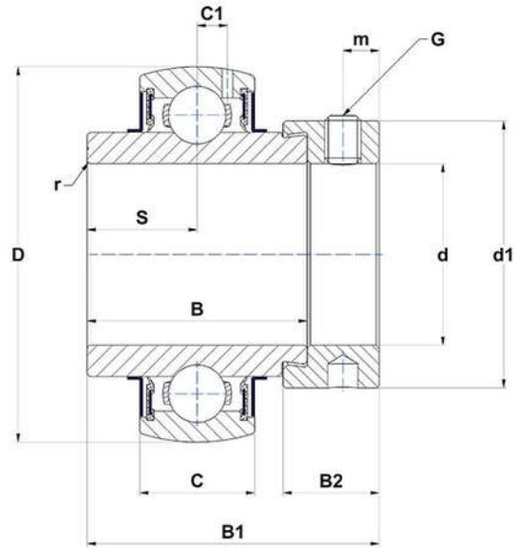

PRODUCT DEFINITION

Brand	SNR
B - Width of Inner Ring	42,9 mm
B1 - Overall width Inner Ring	58,7 mm
B2 - Width of eccentric locking collar/nut	20,6 mm
C - Width of Outer Ring	30 mm
C1 - Distance center of OR to center of lubrication zone	9 mm
d - Shaft diameter	45 mm
d1 - Outer dia of eccent. Lock. collar / nut of adapter sleeve	70 mm

EX309G2
Insert bearings

PRODUCT DEFINITION	
D - Outer diameter of OR	100 mm
G - Set screw size	M10x1,25
m - Distance to set screw	8 mm
r - Radius Inner Ring	2
S - Distance front side/bearing centre	19,8 mm
f0 - Factor	13
SW - Wrench size	5 mm

PRODUCT PERFORMANCE	
C - Dynamic load rating	53000000 mN
C0 - Static load rating	31800000 mN
Operating temperature min.	253,15 °K
Operating temperature max.	373,15 °K

OTHER FEATURES	
Mass	1,45 kg
Recommended tightening torque for set screw	22 N-m

BEARING FREQUENCIES	
BPFO - Over rolling frequency on outer ring (60 rpm)	3.04965986394558 Hz
BPFI - Over rolling frequency on inner (60 rpm)	4.95034013605442 Hz
BSF - Over rolling frequency on rolling element (60 rpm)	3.97143429311596 Hz
BRF - Rotational frequency – rolling element (60 rpm)	1.98571714655798 Hz
FTF - Rotational frequency - cage (60 rpm)	0.381207482993197 Hz