MOFLASH SIGNALLING

INSTALLATION INFORMATION

PLEASE READ PRIOR TO INSTALLATION



LED-TL Factory Assembly Series

VISUAL SIGNALLING DEVICE

S00601 - ISSUE 2

EN Translations & Documentation, scan **QR Code**
FR Traductions & Documentation, scannez le **QR Code**
DE Übersetzungen & Dokumentation, **QR-Code** scannen
IT Traduzioni & Documentazione, scansionare il **QR code**
ES Traducciones & Documentación, escanear **QR code**

APPROVALS AND CONFORMITIES

RoHS

www.moflash.com

technical@moflash.co.uk

General Installation Notes

- Installation must be carried out in accordance with the latest codes and regulations by a qualified electrician.
- Ensure power is disconnected prior to installation or maintenance to avoid danger of electrical shock.
- Environmental exposure conditions during installation should be dry. Moist or wet conditions should be avoided.
- The Lens of the product is Polycarbonate plastic. Do not clean with petroleum-based cleaners.
- Avoid mounting the Beacon where it will be subjected to excessive vibration.

Installation Instructions

Position the bracket on the required mounting surface then mark and drill the appropriate holes for the fixing screws (not supplied). The brackets are designed with a keyhole slot at the top and an elongated one at the bottom **(see Diagram 1).** Now securely affix the Traffic Light assembly into place.

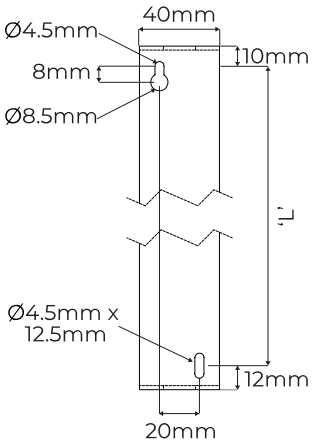

Diagram 1

Once the Traffic Light assembly is firmly secured, remove the 2 screws that retain the Shroud and Lens from the Green TL module in place. Remove the Shroud and then carefully pull the Lens away from the back box to expose the Termination Block located in the base of the unit.

The control wires are colour coordinated with the Lens colour and all terminations are made to this block.

Insert the power/control cable through the M16 Cable Gland (4.5 – 10mm max cable diameter) attached to the bottom of the Green LED module Base, and make the necessary connections to the Termination Block as required **(see Wiring Diagrams 2 & 3)**

Please Note: For 48vDC operation, please reverse the polarity of "0v" and "Vin" to allow for use on DC supply.

The required output must now be selected by setting the Jumper Links located on the LED modules as shown below:

To set the LED module to **Flash mode @ 120** flashes/min: **Fit links to J5 and J1** pin headers.
To set the LED module to **Flash mode @ 60** flashes/min: **Fit link to J5** and remove link at **J1** pin header.
To set the LED module to Static Mode: Remove both Links at J1 & J5

Please Note: The modules are pre-set to Static Mode.

Once all connections have been made and the output selected, the Lenses can now be located back into place. Firstly, ensure the Base 'O' rings are in place. Line up the Lens holes with those in the base and carefully snap the Lens into position, taking care that power cables do not foul PCB components. Locate the Shrouds over the Lenses and secure in position with the two screws removed earlier.

By slackening off the top & bottom M16 Glands, the Traffic Lights can now be rotated through 180 degrees to optimise the best viewing position.

Once this has been selected, tighten up the two M16 glands.

Wiring Diagram

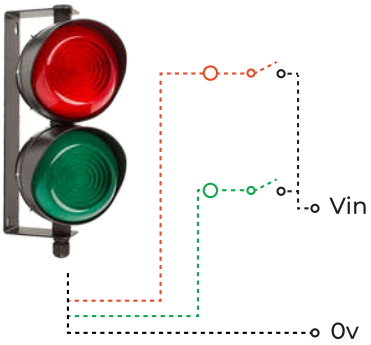

Wiring Diagram 2

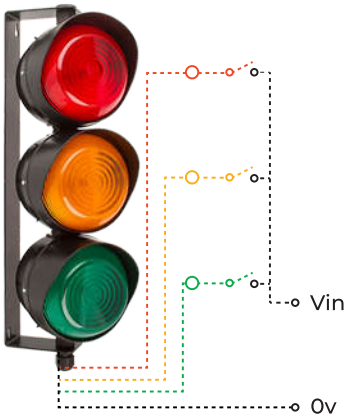

Wiring Diagram 3

Moflash Signalling Limited accepts no liability for any consequences following use of this document. Any technical specifications and products referred to within this document are subject to change without notice due to continual improvement and product development policies. All dB(A) figures are subject to environmental conditions. The units are sold under Moflash standard conditions of sale, available on request. Additional resources, including installation sheet translations, certificates and DoCs are available from the **www.moflash.co.uk** website.