Brand of NTN corporation

Technical data

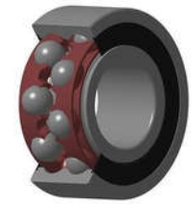

5205EEG15

Double row angular contact ball bearings

VISUAL (S)

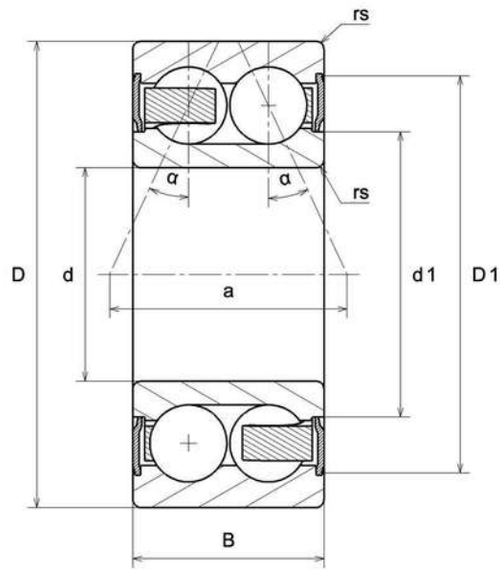

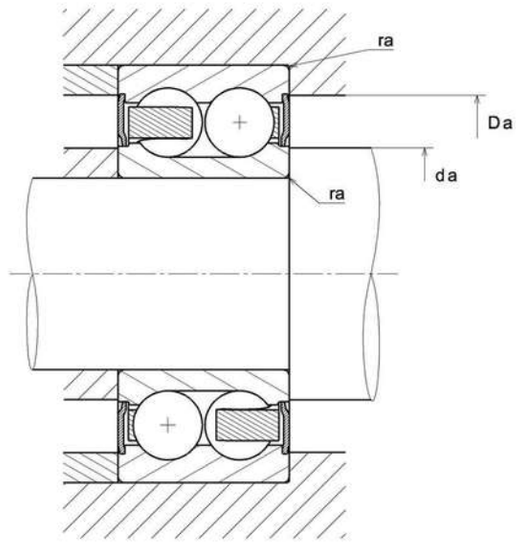

NTN Europe
1 rue des Usines · BP 2017 · 74010 Annecy Cedex · France · Tel. +33 (0)4 50 65 30 00
S.A. au capital de 322 639 919 € · RCS ANNECY B 325 821 072 · Id. Fiscale : FR 48 325 821 072
SIRET 325 821 072 00015 · Code APE 2815 Z · Code NACE 28.15

5205EEG15
Double row angular contact ball bearings

PRODUCT DEFINITION	
Brand	SNR
d - Internal diameter	25 mm
D - External diameter	52 mm
B - Bearing/Inner ring width	20,6 mm
d1 - External diameter inner ring	33,5 mm
D1 - Inner diameter outer ring	46,2 mm
a - Charge load application point	26,5 mm
- Contact angle	25 °
rs - Min fillet radius	1 mm
Radial clearance class	CN
Precision class	P0
Mass	0,16 kg

PRODUCT PERFORMANCE	
C - Dynamic load	20,6 kN
C0 - Static load	14,7 kN
Cu - Fatigue limit load	0,91 kN
f0 - Coefficient	14.3
Nlim - Mechanical Limit Speed	8600 tr/min
Tmin - Min operating temperature	-20 °C
Tmax - Max operating temperature	120 °C

BEARING FREQUENCIES	
BPFO - Characteristic outer ring frequency (60 rpm)	3.67 Hz
BPFI - Characteristic inner ring frequency (60 rpm)	5.33 Hz

BEARING FREQUENCIES	
FTF - Characteristic cage frequency (60 rpm)	0.408 Hz
BSF - Characteristic rolling element frequency (60 rpm)	4.746 Hz

ABUTMENT	
da min - Min shoulder diameter IR	30 mm
da max - Max shoulder diameter IR	33,5 mm
Da max - Max shoulder diameter OR	47 mm
ra max - Max shaft & housing fillet radius	1 mm