KT5002

Capacitive touch sensor

KTRDHMK-RBPKG/AM/AS/0,3M

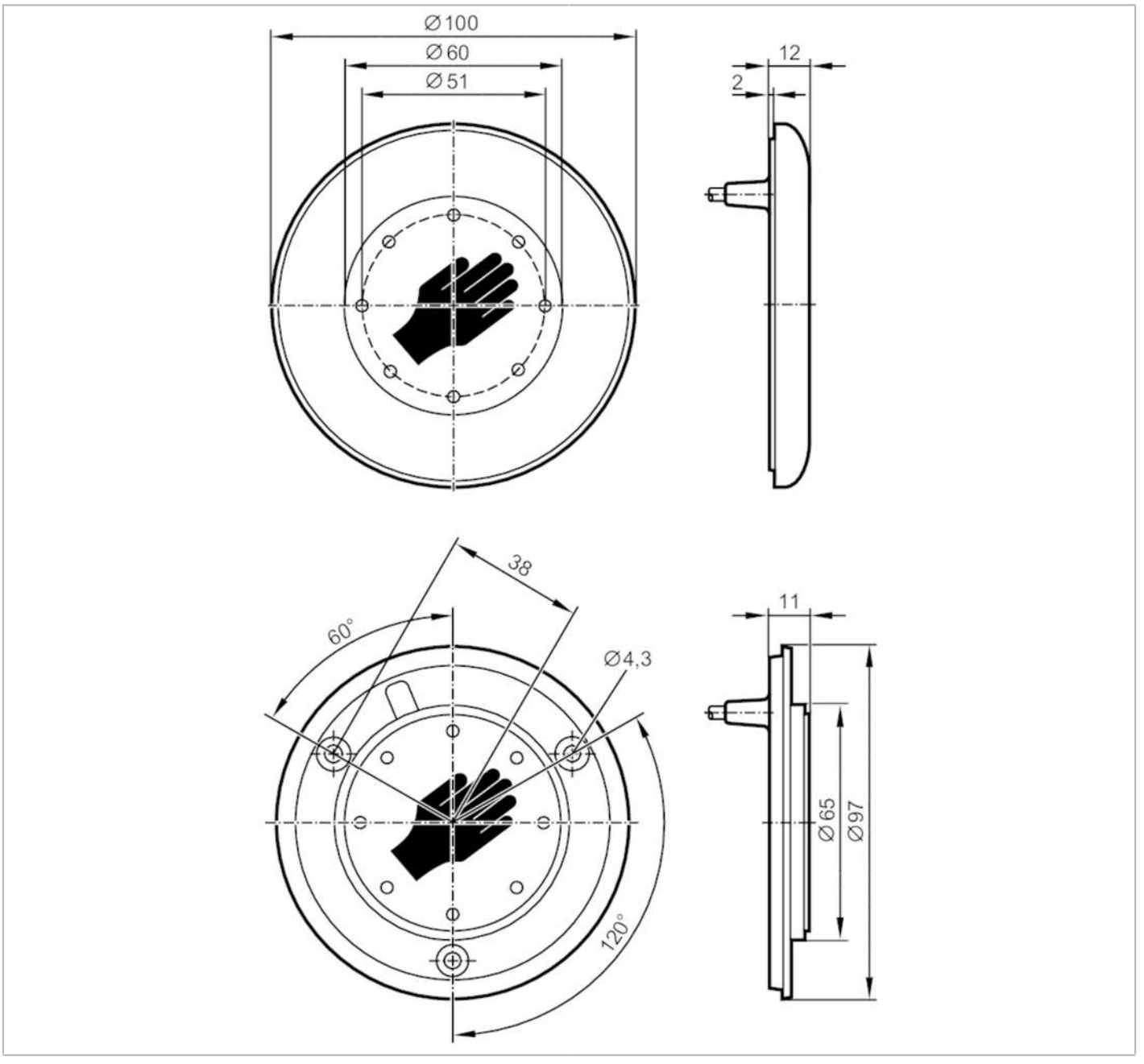

Product characteristics		
Electrical design		PNP
Output function		normally open
Dimensions	[mm]	Ø 100 / L = 11
Application		
Operating principle		dynamic
Electrical data		
Operating voltage	[V]	12...30 DC
Current consumption	[mA]	30
Protection class		III

KT5002

Capacitive touch sensor

KTRDHMK-RBPKG/AM/AS/0,3M

Reverse polarity protection		yes
Max. power-on delay time	[ms]	500
Outputs		
Electrical design		PNP
Output function		normally open
Permanent current rating of switching output DC	[mA]	200
Short-circuit protection		yes
Overload protection		yes
Length of output signal	[ms]	300
Response times		
Response time	[ms]	35
Operating conditions		
Ambient temperature	[°C]	-40...85
Protection		IP 67; IP 69K; (on the front)
Tests / approvals		
MTTF	[years]	391
Mechanical data		
Weight	[g]	131
Dimensions	[mm]	Ø 100 / L = 11
Materials		active face: PA Grilamid TR 90UV transparent; housing: PC/ABS black; Coloured surround: PC/ABS green
Displays / operating elements		
Display	switching status	8 x LED, red
	operation	8 x LED, green
Accessories		
Accessories (optional)		surround in different colours
Remarks		
Pack quantity		1 pcs.

Electrical connection - plug

Cable: 0.3 m, PUR

Connector: 1 x M8; coding: A



KT5002

Capacitive touch sensor

KTRDHMK-RBPKG/AM/AS/0,3M

Connection

