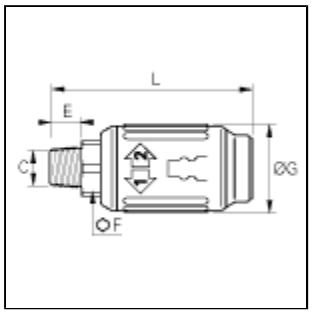

405U
MALE BODY BSP TAPER AND NPT

	DN (mm)	Flow Rate (l/min)	C	E (mm)	F (mm)	ØG (mm)	L (mm)	(kg)
9405U06 13	5,5	1250	R1/4	12,0	17,0	31,5	75,0	0,075
9405U06 14	5,5	1250	NPT1/4	11,0	17,0	31,5	74,0	0,075
9405U06 17	5,5	1250	R3/8	12,5	19,0	31,5	76,5	0,095
9405U06 18	5,5	1250	NPT3/8	11,5	19,0	31,5	75,5	0,090
9405U06 21	5,5	1250	R1/2	16,0	22,0	31,5	81,5	0,110
9405U06 22	5,5	1250	NPT1/2	15,0	22,0	31,5	80,5	0,105
9405U08 13	8,0	2250	R1/4	12,0	22,0	36,5	84,0	0,120
9405U08 14	8,0	2250	NPT1/4	11,0	22,0	36,5	83,0	0,120
9405U08 17	8,0	2250	R3/8	12,0	22,0	36,5	84,0	0,120
9405U08 18	8,0	2250	NPT3/8	11,5	22,0	36,5	83,5	0,120
9405U08 21	8,0	2250	R1/2	16,0	22,0	36,5	88,0	0,140
9405U08 22	8,0	2250	NPT1/2	15,0	22,0	36,5	87,0	0,000



405U
MALE BODY BSP TAPER AND NPT

maximum working pressure	**bar** 16	**MPa** 1,6	**psi** 232
working temperature	**°C (Celsius)** From -20 to 60	**F (Farenheit)** From -4 to 140	**K (Kelvin)** From 253 to 333

ball	stainless steel
body	engineering grade polymer
sub-base	nickel-plated brass
'O'-rings	nitrile
spring	stainless steel