Datasheet - MS MZM 100-W

Solenoid interlock / MZM 100 / Accessories

☒ Preferred typ



(Minor differences between the printed image and the original product may exist!)

Ordering details

Product type description	MS MZM 100-W
Article number	101185510
EAN code	4030661343464
eCl@ss	27-27-92-91

Global Properties

Product name	Montagebausatz
Weight	210 g

Dimensions

Dimensions	
- Width	63 mm
- Height	120 mm
- Depth	44 mm

Included in delivery

Mounting angle	1 piece
Cylinder head screw with hexagonal M6 x 40	2 piece

Documents

Mounting and wiring instructions (de, en, fr) 110 kB, 13.06.2008
Code: m_mmzp01

Images

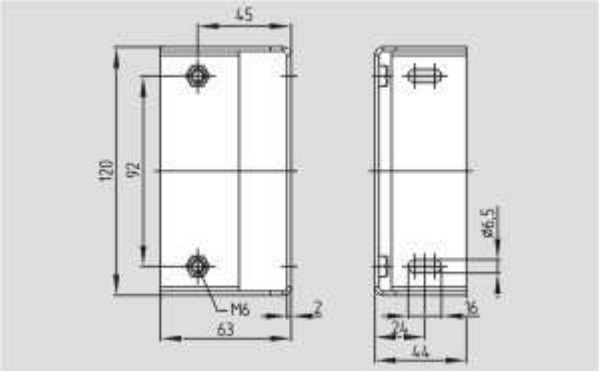

Dimensional drawing (miscellaneous)

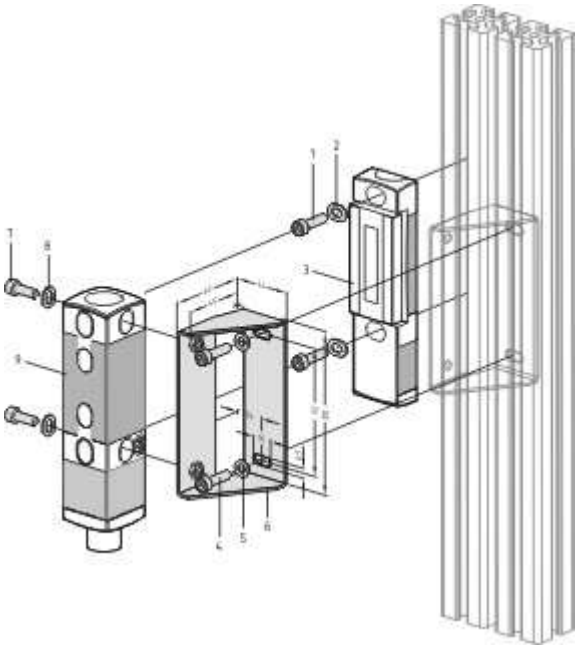
Product graph (exploded-view drawing)



Illustration

K.A. Schmersal GmbH & Co. KG, Möddinghofe 30, D-42279 Wuppertal
The data and values have been checked throroughly. Technical modifications and errors excepted.
Generiert am 30.05.2015 - 14:41:28h Kasbase 3.1.12.F.64I