EX-ATEX LED MULTI-FUNCTION LIGHT
Quadro-LED-HI 3G/3D



Designed for tough requirements under industrial conditions.

- Suitable for use in potentially explosive areas in Zones 2 and 22.
- Innovative LED light with high signaling effect.
- Suitable for indoor and outdoor use.
- Extremely insensitive to shock and vibration.
- 3 selectable operating modes as standard:
  - Continuous light
  - Blinking light
  - Flashing light
- Inexpensive and flexible; wide range power supplies as standard.
- Double-pole terminal.

IP 66 / IP 67 — protection system
IK08 — impact-proof housing
+55 °C / –20 °C — operating temperature
brightness adjustable
10 Years — warranty

PRODUCT		Quadro LED-HI 3G/3D	
DATA			
Rated voltage		115/230 V	12-48 V
		AC 50 I 60 Hz / DC	DC
Operating range	AC	90–253 V	—
	DC	90–253 V	11-60 V
Current consumption in continuos light mode (red)		65 mA @ 230 V AC	195 mA @ 24 V DC
Explosion protection		II3G Ex nR IIC T6 Gc II3D Ex tc IIIB T80 °C Dc IP66/67	–20 °C ≤ Ta ≤ +55 °C –20 °C ≤ Ta ≤ +55 °C
Category (area of use)		3G (Zone 2), 3D (Zone 22)	
Conformity to standards		Directive 2014/34/EU (ATEX)	
Testing body		Pfannenberg PDG 19.0007 X	
Special conditions		X: see operating instructions	
Operating mode		continuous light I blinking light 1 / 2 Hz I flashing light 0.1 / 0.5 / 0.75 / 1 / 2 Hz	
Control of operating mode		internally	internally / externally
Light source		4 High output LED	
Light intensity (DIN 5037) [1]		75 cd, adjustable 15% - 100%	
Max. viewing distance		201 m	
Operating temperature		-20 °C ... +55 °C	
Storage temperature		-40 °C ... +70 °C	
Relative humidity		90%	
Protection system (EN 60529)		IP 66 / 67, mounting arbitrary	
Impact resistance (EN 50102)		IK08	
Protection class		II	
Duty cycle		100 %	
Service life of the light source		>50,000 hrs	
Material	lens	⁄ ○ ● ● ● ● ● polycarbonate (PC)	
	housing	polycarbonate (PC), light grey RAL 7035	
Cable entry		2x M20 x 1.5 (1x sealing screw, 1x cable connection)	
Connecting terminal		cage clamp terminal 0.08–2.5 mm2	
Weight		500 g	

[1] with a clear lens

DIMENSIONS

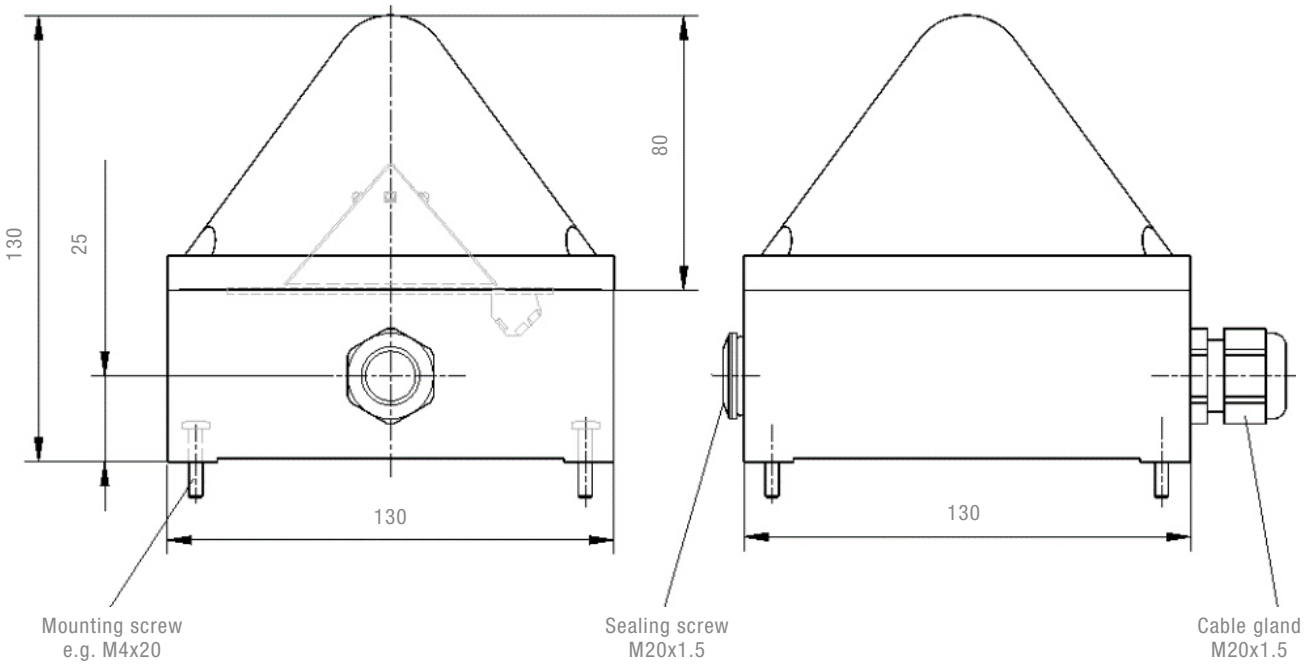

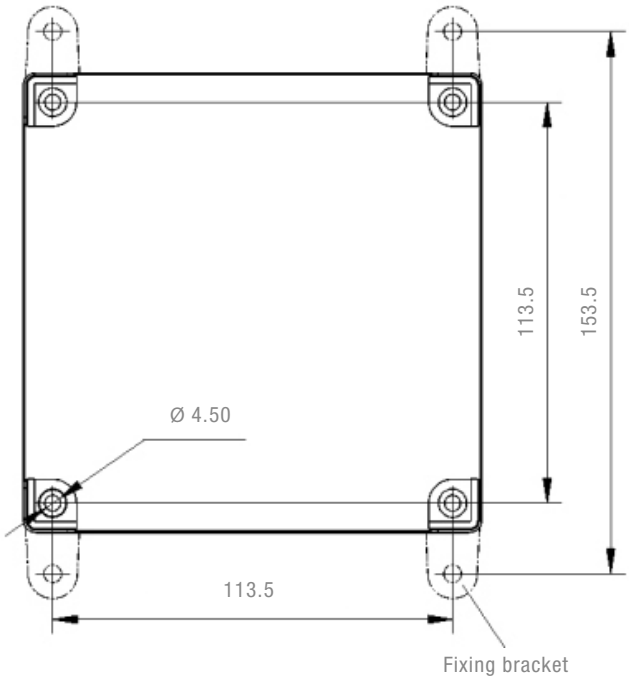

Additional mounting possible via external lugs (included).

ARTICLE NO.	Quadro-LED-HI 3G/3D	
LENS COLOUR	115 - 230 V AC / DC	12 - 48 V DC
	21108643009	21108633009
	21108644009	21108634009
	21108645009	21108635009

Article numbers for other colours on request.

CONNECTION DIAGRAM

Quadro-LED-HI 3G/3D 115 V - 230 V

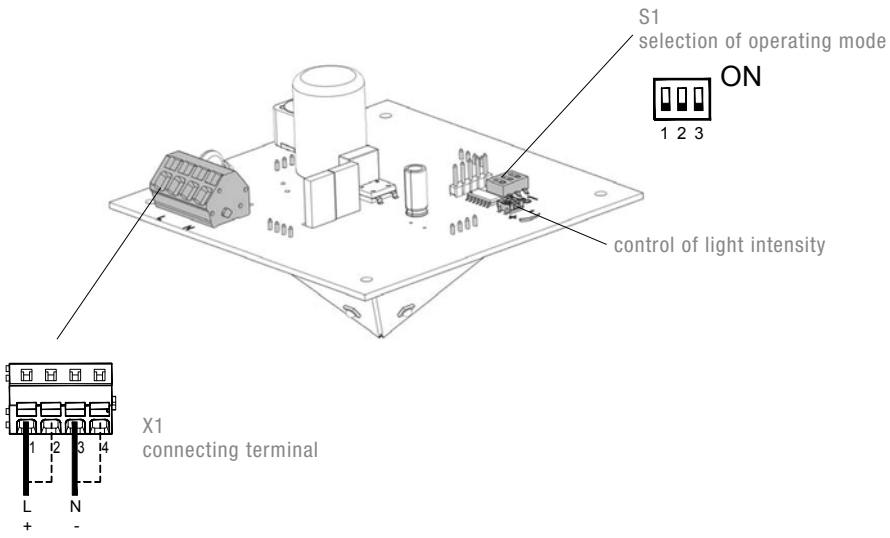

Quadro-LED-HI 3G/3D 12 V - 48 V

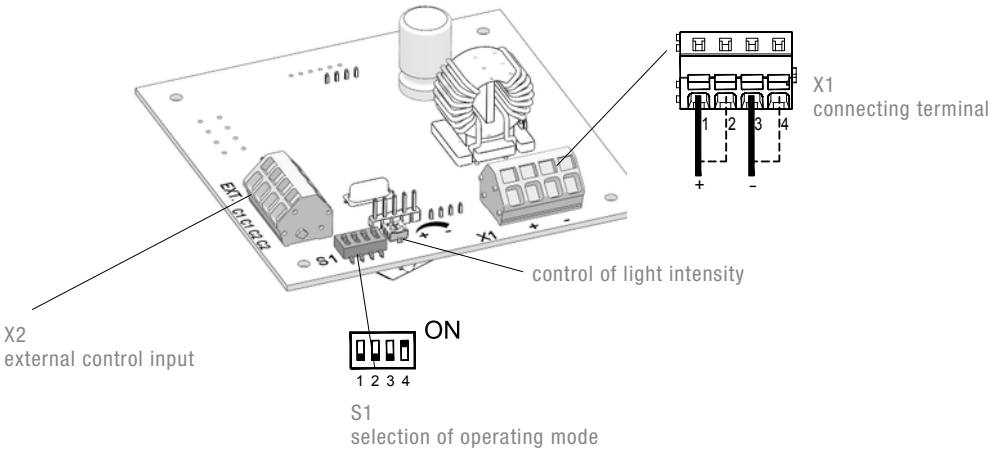

CONFORMITY TO STANDARDS

We hereby declare that the explosion-protected means of alarm with the type designation **Quadro-LED-HI 3G/3D** has been developed and manufactured in accordance with the requirements as per EN 60079.

This declaration is based on compliance with the following regulations and standards:

DIN EN 60079-0	Electrical equipment for areas at risk of gas explosions – Part 0: General requirements
DIN EN 60079-15	Electrical equipment for areas at risk of explosions – Part 15: type of protection type “n”
DIN EN 61241-0	Electrical equipment for use in areas with combustible dust – General requirements
DIN EN 61241-1	Electrical equipment for use in areas with combustible dust – protection by enclosure “tD”
DIN EN 60598-1	Lights – Part 1: General requirements and tests
DIN EN 60947-1	Low-voltage switchgear – Part 1: General specifications
DIN EN 60529	Types of protection by enclosure (IP code)
DIN EN 50102	Types of protection by enclosure for electrical equipment against external mechanical stresses (IK code)
DIN EN 61000-6-2	Electromagnetic compatibility (EMC) – Part 6-2: Generic standards, noise immunity for industrial areas
DIN EN 61000-6-3	Electromagnetic compatibility (EMC) – Part 6-3: Generic standards, interference emission for residential areas, business and commercial areas as well as small companies
DIN EN 981	Machine safety – System of acoustic and visual alarm signals and information signals
ISO 11429	System of acoustic and visual alarm signals and information signals
UVV-BGV A3(VBG4)	Electrical plants and equipment
GSGV	German Appliance Safety Act

The Quadro-LED-HI 3G/3D multifunction lights are approved for use in potentially explosive areas in Zones 2 and 22 as per 2014/34/EU(ATEX).