Interguard IG222

INTERGUARD IG222 is a controller which allows 2 doors to be interlocked to restrict or control entry to and from secure areas.
The controller provides 2 relays for door locks, a breach relay and facilities for door status indication. The breach relay operates on power loss, door open too long (DOTL) or forced door conditions. All relays are rated at 1A 30vdc. The method of request to release is normally via pushbuttons on the controller but can be via remote pushbuttons or high security keypads, card readers, biometrics etc...
Some form of door sensing is required on each door to signal to the controller that the door is closed, this is normally a magnetic reed door contact or a monitored door strike or maglock.

- Interlocking for 2 doors
- Status indication
- Supervised and un-supevised modes
- Breach/fault relay
- 20 secs - 60 secs DOTL time
- 0 sec - 20 sec dwell time
- Ideal for use in Control Rooms, Jewellery
- Stores, Banks and Cash Offices etc...

Here are three modes of operation:
Mode 1. Standard door strikes/maglocks and door contacts for door status monitoring.
Mode 2. Monitored door strikes/maglocks and/or autromatic door openers/closers.
Mode 3. Un-secured door mode for hands free un-supervised operation.
The integral key switch can be connected for various uses including isolating local door controls and releasing or locking both doors.
The IG222 requires a supply of 12 or 24vdc power. The choice will depend upon the type of door strike, lock or closure used.
In most circumstances some form of emergency door release is required (See RP-GS-11)

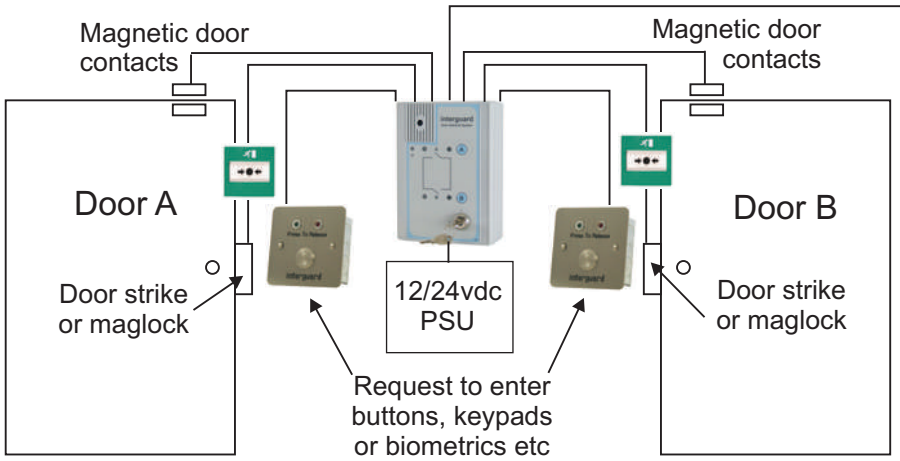



To remote warning device for system breached alarm

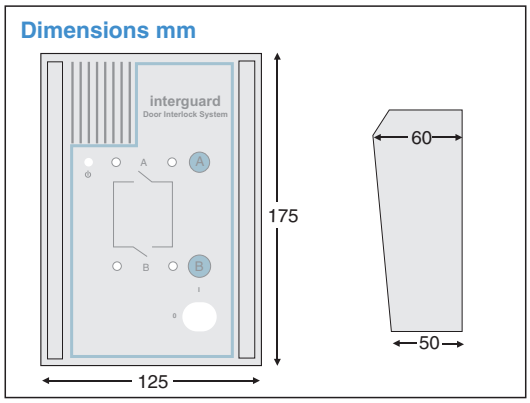



S1718S



RP-GS-11



8581750/HB



IG222

Hoyles Electronic Developments Ltd
T. 01744 886600 F. 01744 886607 E. sales@hoyles.com W. www.hoyles.com