# PRODUCT DATASHEET
# HB BRACKET 138

HIGH BAY BRACKETS GEN 5 | Mounting accessory for HIGH BAY GEN 5 luminaires



PERFOR-
MANCE
CLASS

## Product features

- Brackets made of black steel
- Adjustable swivel angle: ±90°
- HB BRACKET 138 suitable for HB P 75W, 150W and 200W versions (On-Off and DALI)


© 2026, LEDVANCE GmbH. All rights reserved.

## TECHNICAL DATA

### Dimensions & Weight

| | |
|---|---|
| Length | 138 mm |
| Width | 35 mm |
| Height | 203 mm |
| Product weight | 350.00 g |

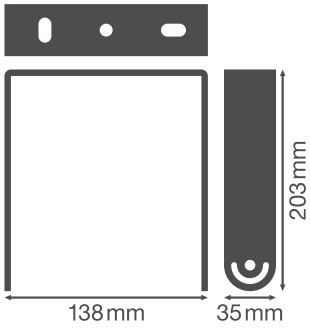

HB BRACKET 138

### Materials & Colors

| | |
|---|---|
| Product color | Black |
| RAL Color (most similar) | RAL 9005 |
| Body material | Steel |

### Application & Mounting

| | |
|---|---|
| Mounting type | Surface |
| Mounting location | Luminaire |
| Replaceable light source | No |

## DOWNLOAD DATA

| | Documents and certificates | Document name |
|---|---|---|
| PDF | User instruction / safety instructions | HB ACC UI |
| PDF | User instruction / safety instructions | HB ACC |
| PDF | Declarations of conformity | HIGHBAY P |
| PDF | Declarations of conformity UKCA | HIGHBAY P |


© 2026, LEDVANCE GmbH. All rights reserved.

| | Tender texts | Document name |
|---|---|---|
| | Tender documents | HIGH BAY BRACKETS GEN 5 138-EN |

## LOGISTICAL DATA

| Product code | Packaging unit (Pieces/Unit) | Dimensions (length x width x height) | Gross weight | Volume |
|---|---|---|---|---|
| 4058075844643 | Folding box<br>1 | 40 mm x 143 mm x 210 mm | 388.00 g | 1.20 $dm^3$ |
| 4058075844650 | Shipping box<br>10 | 302 mm x 227 mm x 234 mm | 4249.00 g | 16.04 $dm^3$ |

The mentioned product code describes the smallest quantity unit which can be ordered. One shipping unit can contain one or more single products. When placing an order, for the quantity please enter single or multiples of a shipping unit.

## References / Links

– For Guarantee see www.ledvance.com/guarantee

## DISCLAIMER

Subject to change without notice. Errors and omission excepted. Always make sure to use the most recent release.


© 2026, LEDVANCE GmbH. All rights reserved.