5.08mm DIN rail mounted inverted/ reverse terminal blocks

Product overview

- Horizontal orientations
- Polarized moldings
- Can be reversed on DIN clips
- Also available in 5.08mm pitch
- Molded in green UL94-V0 flame retardant PA 66
- 2.5mm² (28-14AWG)
- cULus , approved
- 6-12 poles standard (13-24 also available)

SPECIFICATION	
Rating	UL=15A/300V IEC 20A/450V
Insulation resistance	500MΩ/500V
Withstand Voltage	AC2000V/1min
Contact Resistance	20mΩ (max)
Working Temperature	-40°C to 105+°C
Mouldings	UL94-V0 Flame retardant PA66
Pin/Terminal	Brass, Tin plated
Rising Clamp	Brass, nickel plated
Screw/Torque	M3 Steel, zinc plated 0.5Nm

DIN rail mounting male vertical

PART NO.	POLES	LENGTH
CTBPD96VJ/6	6	32.0mm
CTBPD96VJ/7	7	37.1mm
CTBPD96VJ/8	8	42.2mm
CTBPD96VJ/9	9	47.2mm
CTBPD96VJ/10	10	52.3mm
CTBPD96VJ/11	11	57.4mm
CTBPD96VJ/12	12	62.5mm

CTBPD96VJ



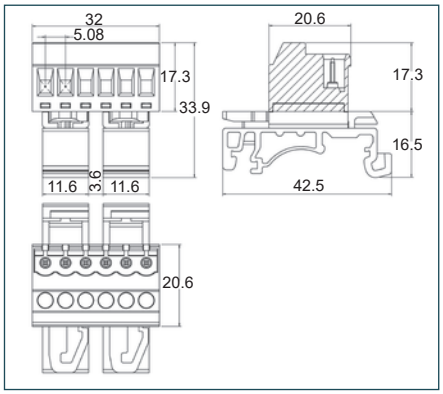

DIN rail mounting male vertical flanged

PART NO.	POLES	LENGTH A	LENGTH B
CTBPD96VJ/6FL	6	32.0mm	41.8mm
CTBPD96VJ/7FL	7	37.1mm	46.9mm
CTBPD96VJ/8FL	8	42.2mm	52.0mm
CTBPD96VJ/9FL	9	47.2mm	57.0mm
CTBPD96VJ/10FL	10	52.3mm	62.1mm
CTBPD96VJ/11FL	11	57.4mm	67.2mm
CTBPD96VJ/12FL	12	62.5mm	72.3mm

CTBPD96VJ/FL



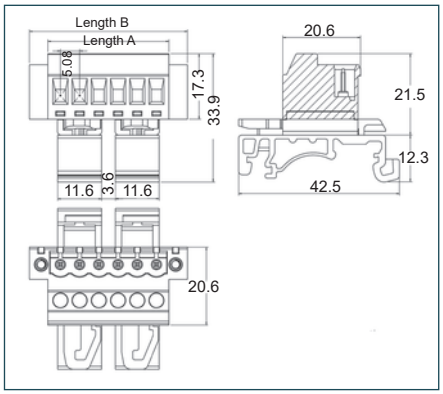

DIN rail mounting male horizontal

PART NO.	POLES	LENGTH
CTBPD96HJ/6	6	32.0mm
CTBPD96HJ/7	7	37.1mm
CTBPD96HJ/8	8	42.2mm
CTBPD96HJ/9	9	47.2mm
CTBPD96HJ/10	10	52.3mm
CTBPD96HJ/11	11	57.4mm
CTBPD96HJ/12	12	62.5mm

CTBPD96HJ/FL



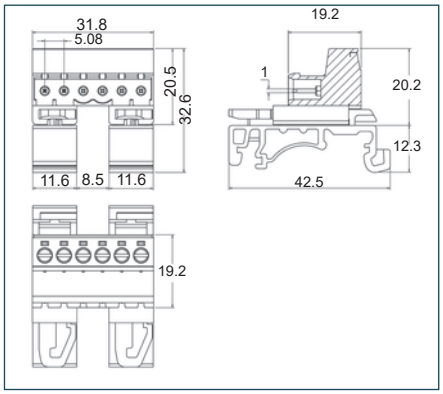

+44 (0)1638 716101 | sales@camdenboss.com | www.camdenboss.com

We operate a constant improvement policy, our products are subject to change without notice.

Vers 1