440.SR - Non sparking metric combination wrenches



Description:

● Special non sparking and anti-magnetic Copper-Beryllium alloy.

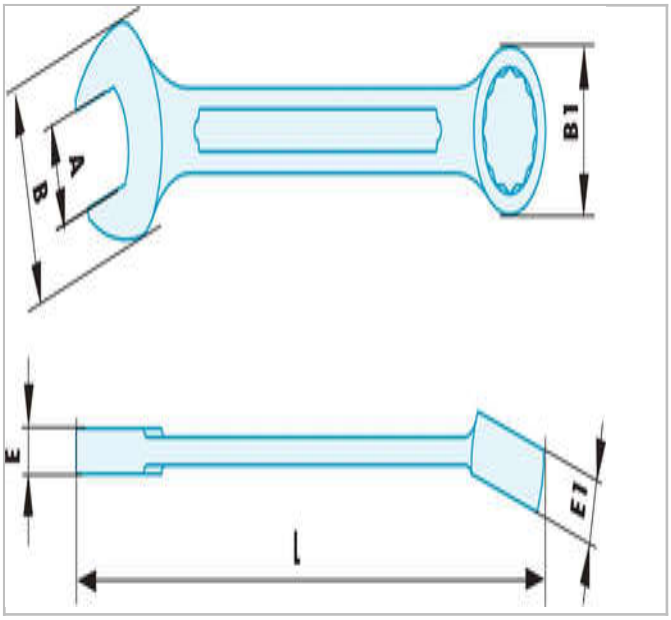

© FACOM 2020

	A [mm]	Length L [mm]	Thickness E [mm]	Thickness E1 [mm]	Head Width B [mm]	Head Width B1 [mm]	Weight [g]
440.10SR	10.0	135.0	5.4	8.0	22.0	18.0	55.0
440.11SR	11.0	150.0	6.0	9.0	26.5	21.0	55.0
440.12SR	12.0	150.0	6.0	9.0	26.5	21.0	75.0
440.13SR	13.0	175.0	6.6	10.0	30.0	23.0	75.0
440.14SR	14.0	175.0	6.6	10.0	30.0	23.0	120.0
440.15SR	15.0	195.0	7.6	11.0	35.0	27.0	125.0
440.16SR	16.0	195.0	7.6	11.0	35.0	27.0	155.0
440.17SR	17.0	195.0	7.6	11.0	35.0	27.0	155.0
440.18SR	18.0	215.0	8.0	12.0	39.0	31.0	210.0
440.19SR	19.0	215.0	8.0	12.0	39.0	31.0	210.0
440.20SR	20.0	230.0	9.5	13.5	45.0	34.0	225.0
440.21SR	21.0	230.0	9.5	13.5	45.0	34.0	225.0
440.22SR	22.0	245.0	9.4	14.0	46.0	36.0	250.0
440.23SR	23.0	265.0	9.4	15.2	49.0	38.0	250.0
440.24SR	24.0	265.0	10.0	15.2	49.0	38.0	260.0
440.25SR	25.0	265.0	9.4	15.2	49.0	38.0	260.0
440.26SR	26.0	290.0	10.0	17.0	56.0	42.0	420.0
440.27SR	27.0	290.0	11.4	17.0	56.0	42.0	420.0
440.30SR	30.0	320.0	13.0	20.0	61.0	49.0	560.0
440.32SR	32.0	340.0	14.0	21.0	65.0	52.0	670.0
440.34SR	34.0	360.0	15.0	21.0	72.0	55.0	850.0
440.35SR	35.0	360.0	15.0	21.0	72.0	55.0	890.0
440.36SR	36.0	360.0	15.0	21.0	72.0	55.0	890.0
440.38SR	38.0	430.0	15.0	21.0	82.0	64.0	1400.0
440.41SR	41.0	430.0	15.0	21.0	82.0	64.0	1400.0
440.46SR	46.0	480.0	16.0	22.0	90.0	70.0	1900.0
440.50SR	50.0	520.0	17.0	23.0	98.0	77.0	2200.0

© FACOM 2020

440.55SR	55.0	560.0	18.0	23.0	108.0	83.0	2800.0
440.60SR	60.0	595.0	20.0	25.0	115.0	89.0	3200.0
440.65SR	65.0	595.0	21.0	27.0	125.0	95.0	3700.0
440.6SR	6.0	105.0	4.4	6.0	14.0	11.6	20.0
440.70SR	70.0	630.0	24.0	29.0	142.0	112.0	4800.0
440.7SR	7.0	120.0	5.0	7.0	17.5	14.5	25.0
440.8SR	8.0	120.0	5.0	7.0	17.5	14.5	35.0
440.9SR	9.0	135.0	5.4	8.0	22.0	18.0	40.0

© FACOM 2020