Inductive Sensors

# BES M12MG-GOC30B-BV03
# Order Code: BES0474

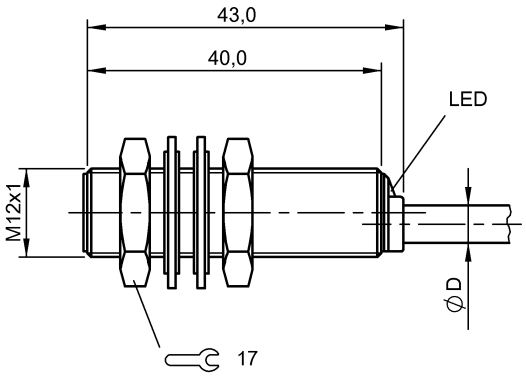


## Basic features

| | |
|---|---|
| **Approval/Conformity** | CE<br>cULus<br>EAC<br>WEEE |
| **Base type deviation** | Cable length |
| **Basic standard** | IEC 60947-5-2 |
| **Trademark** | Global |

## Display/Operation

| | |
|---|---|
| **Function indicator** | yes |
| **Power indicator** | no |

## Electrical connection

| | |
|---|---|
| **Cable diameter D** | 4.60 mm |
| **Cable length L** | 3 m |
| **Conductor cross-section** | 0.34 mm² |
| **Connection type** | Cable, 3.00 m, PVC |
| **Number of conductors** | 2 |
| **Polarity reversal protected** | yes |
| **Protection against device mix-ups** | yes |
| **Short-circuit protection** | yes |

## Electrical data

| | |
|---|---|
| **Load capacitance max. at Ue** | 1 µF |
| **Min. operating current Im** | 5 mA |
| **Operating voltage Ub** | 10...36 VDC |
| **Rated insulation voltage Ui** | 75 V DC |
| **Rated operating current Ie** | 100 mA |
| **Rated operating voltage Ue DC** | 24 V |
| **Rated short circuit current** | 100 A |
| **Ready delay tv max.** | 50 ms |
| **Residual current Ir max.** | 600 µA |
| **Ripple max. (% of Ue)** | 15 % |
| **Switching frequency** | 1300 Hz |
| **Utilization category** | DC -13 |
| **Voltage drop static max.** | 4.2 V |

## Environmental conditions

| | |
|---|---|
| **Ambient temperature** | -25...70 °C |
| **Contamination scale** | 3 |
| **EN 60068-2-27, Shock** | Half-sinus, 30 $g_n$, 11 ms |
| **EN 60068-2-6, Vibration** | 55 Hz, amplitude 1 mm, 3x30 min |
| **IP rating** | IP67 |

## Functional safety

| | |
|---|---|
| **MTTF (40 °C)** | 315 a |

## Interface

| | |
|---|---|
| **Switching output** | polarized normally closed (NC) |

# BES M12MG-GOC30B-BV03
# Order Code: BES0474

## Material

| | |
|---|---|
| **Housing material** | Brass, Nickel-free coated |
| **Material jacket** | PVC |
| **Material sensing surface** | PA 12 |

## Mechanical data

| | |
|---|---|
| **Dimension** | Ø 12 x 43 mm |
| **Installation** | for flush mounting |
| **Size** | M12x1 |
| **Tightening torque** | 15 Nm |

## Range/Distance

| | |
|---|---|
| **Assured operating distance Sa** | 2.4 mm |
| **Hysteresis H max. (% of Sr)** | 20.0 % |
| **Rated operating distance Sn** | 3 mm |
| **Real switching distance sr** | 3 mm |
| **Repeat accuracy max. (% of Sr)** | 5.0 % |
| **Switching distance marking** | ■■ |
| **Temperature drift max. (% of Sr)** | 10 % |
| **Tolerance Sr** | ±10 % |

## Remarks

Specify maximum attainable switching frequency (not per IEC 60947-5-2)
Flush: See installation instructions for inductive sensors with extended range 825357.
The sensor is functional again after the overload has been eliminated.
For more information about MTTF and B10d see MTTF / B10d Certificate

Indication of the MTTF- / B10d value does not represent a binding composition and/or life expectancy assurance; these are simply experiential values with no warranty implications. These declared values also do not extend the expiration period for defect claims or affect it in any way.

## Wiring Diagrams

