# Precision pressure regulator, Series PR1-RGP

2024-04-05

**0821302567**

## AVENTICS Series PR1 Precision pressure regulators

The AVENTICS Series PR1/PR2 is designed for applications that demand fast responses to the slightest fluctuation in compressed air. They can be adjusted precisely and are an alternative to electronic pressure regulators. Precision pressure regulators are used to achieve extremely accurate pressure control independent from the pilot pressure and the flow rate. They offer high performance and flexibility, combined with increased reliability.



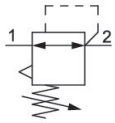


## Technical data

| | |
|---|---|
| Industry | Industrial |
| Function | Precision pressure regulator |
| Parts | Precision pressure regulator |
| Mounting orientation | Any |
| Regulator type | Diaphragm-type pressure regulator |
| Port | G 1/4 |
| Nominal flow Qn | 3000 l/min |
| Min. regulation range | 0.05 bar |
| Max. regulation range | 7 bar |
| Min. working pressure | 0.5 bar |
| Max. working pressure | 16 bar |
| Min. ambient temperature | -35 °C |
| Max. ambient temperature | 60 °C |
| Activation | Mechanical |
| Regulator function | with relieving air exhaust |
| Certificates | Suitable for ATEX |
| Pressure supply | single |
| Max. internal air consumption $q_v$ | 6 l/min |
| Medium | Compressed air<br>Neutral gases |

| | |
|---|---|
| Recommended pre-filtering | 5 µm |
| Weight | 1.5 kg |

## Material

| | |
|---|---|
| Housing material | Die cast zinc |
| Seal material | Chloroprene rubber |
| Part No. | 0821302567 |

## Technical information

The pressure dew point must be at least 15 °C less than ambient and medium temperature and may not exceed 3 °C.

Relieving exhaust (≤ 10 mbar over set pressure)

Mounting: mounting bracket R412004872 or installation in piping

Notice: This product may only be operated with oil-free, dry compressed air.

Internal air consumption depending on adjustment range

Suitable for use in Ex zones 1, 2, 21, 22.

Nominal flow Qn with secondary pressure p2 = 6 bar at Δp = 1 bar

# Precision pressure regulator, Series PR1-RGP

2024-04-05

0821302567

## Dimensions

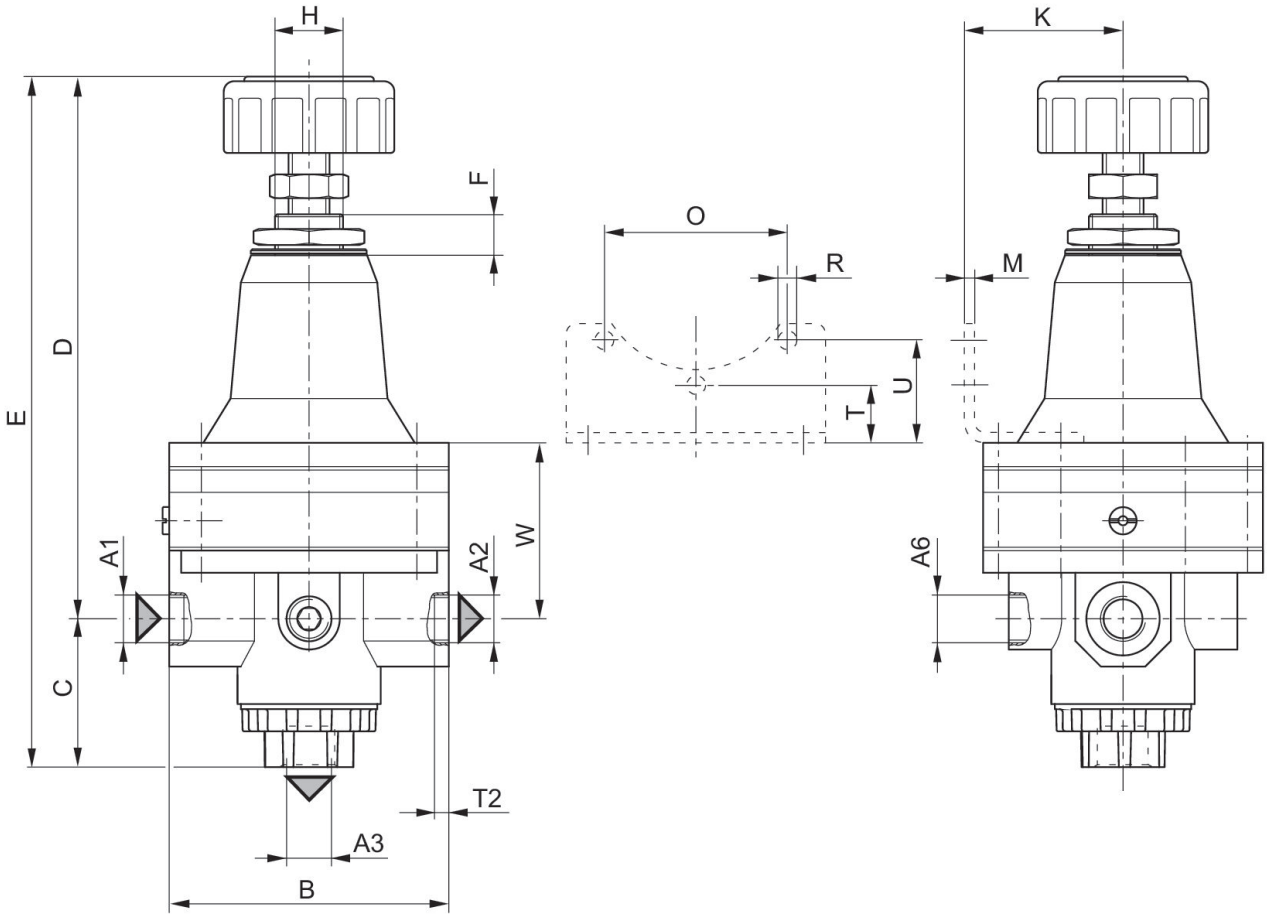


A1 = input
A2 = output
A3 = output
A6 = output

## Dimensions in mm

| Part No. | A1 | A2 | A3 | A6 | B | C | D | E | F |
|---|---|---|---|---|---|---|---|---|---|
| 0821302567 | G 1/4 | G 1/4 | G 3/8 | G 1/4 | 82 | 43.5 | 159 | 202.5 | 10 |

| Part No. | H | K | M | O | R | T | T2 | U | W |
|---|---|---|---|---|---|---|---|---|---|
| 0821302567 | M20x1,5 | 47 | 3 | 54 | 4 | 17 | 16 | 30 | 51.6 |

## Hysteresis

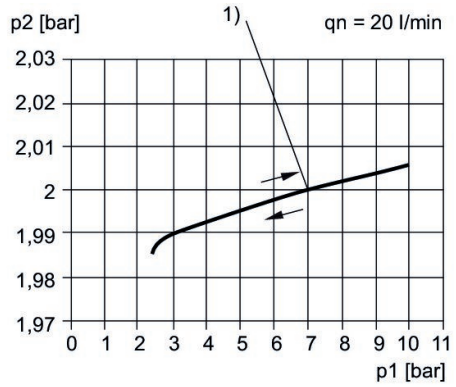


p1 = Working pressure
p2 = Secondary pressure
q = flow rate
1) * starting point

## Flow rate characteristic

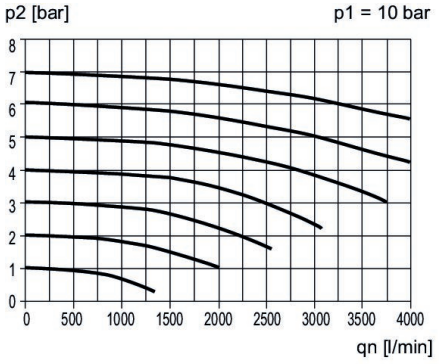


p1 = Working pressure
p2 = Secondary pressure
qn = Nominal flow

## exhaust characteristics (contact limit < 10 mbar)

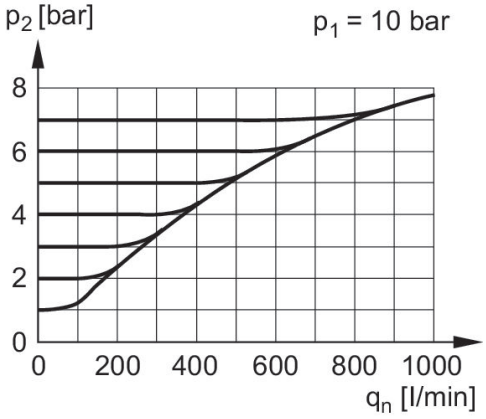


p1 = Working pressure
p2 = Secondary pressure
qn = Nominal flow