DIN Rail Mounting Enclosures for Embedded Systems

(Manufactured by Italtronic SRl. Padova, Italy)

beagleboard.org approved

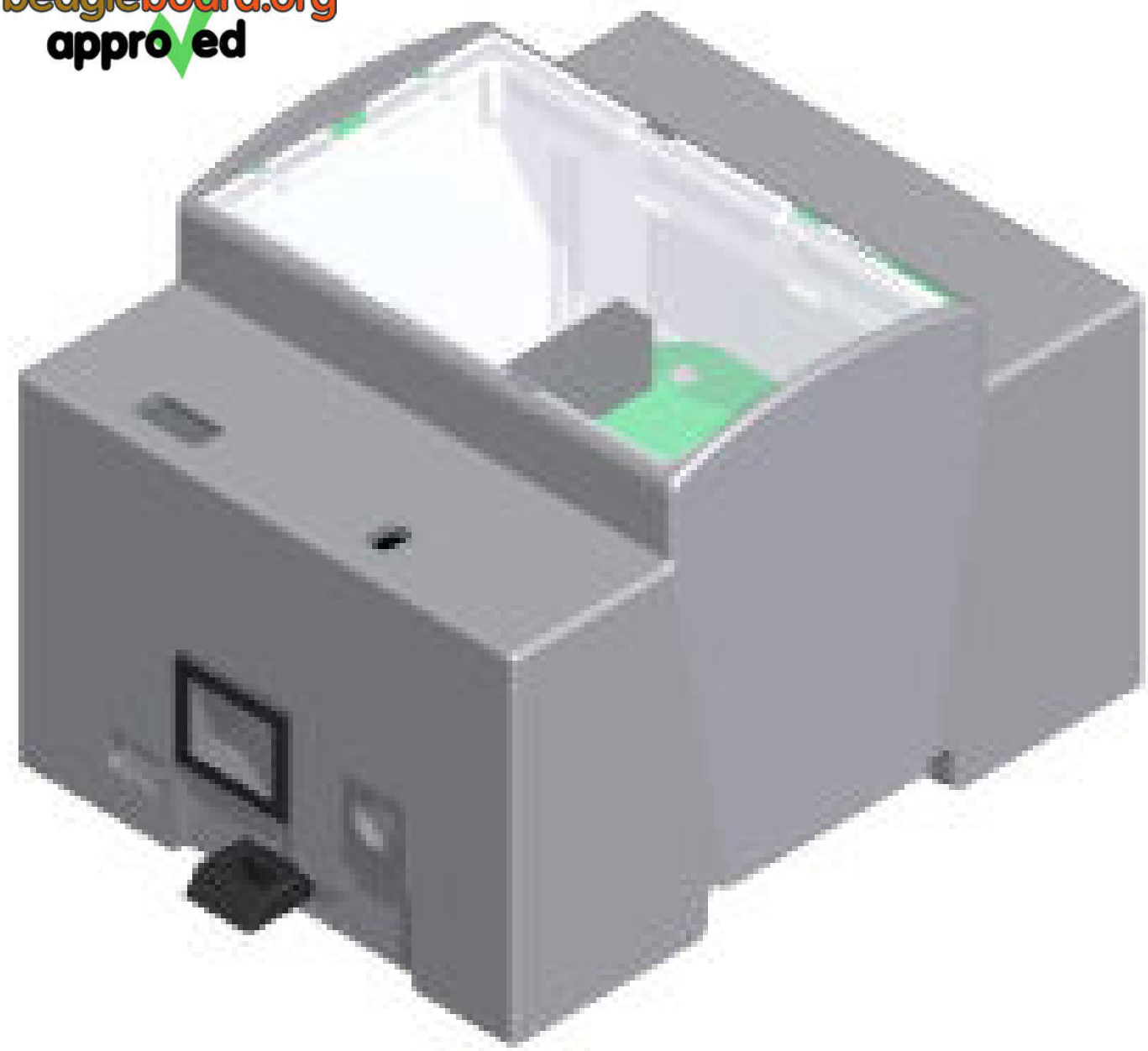

P/N - 25.0410000.BGB

Hitaltech reserve the right to make changes without prior notice. Revision: 1 Date: 01/11/2013

Italtronic Srl. & Hitaltech

Italtronic Srl. based in Padova, Italy design and manufacture an innovative range of plastic enclosures to meet the needs of electronic and electrical applications across varying industries.

Hitaltech are pleased to be the apppointed technical sales, marketing and master distributor for the UK, Ireland and US market.
Through our knowledge and experience of the product Hitaltech aim to offer design engineers an Italtronic product which can meet their technical requirements.

The **Modulbox** is a DIN (EN 60715) mounting enclosure which has been designed according to DIN 43880 to meet the needs of a number of applications including heating & lighting control and energy metering.

This DIN rail mounting enclosure has been modified specifically to house the BeagleBone Black.
The Modulbox is produced in UL94V-0 self extinguishing PPO and PC Material.

Many customisation options are available which aim to meet any design challenge, including machining and/or machining of the enclosure & accessories to meet customer specific demands.

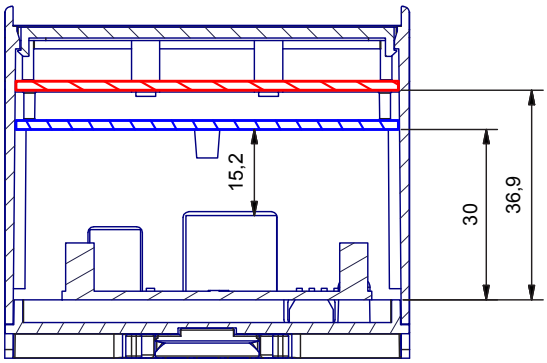

COMPONENTS LIST		
PCB TYPE	PCB DIMENS	TOLERANCE
B	67.6X86.4	±0,1 mm
C	67.4X42.0	±0,1 mm

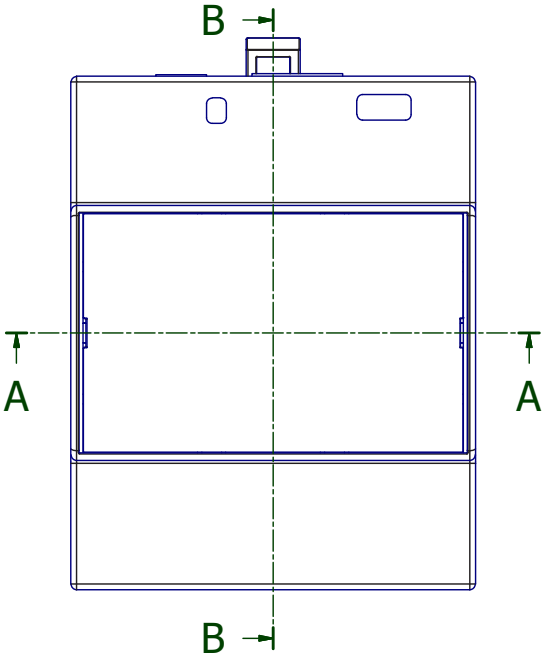

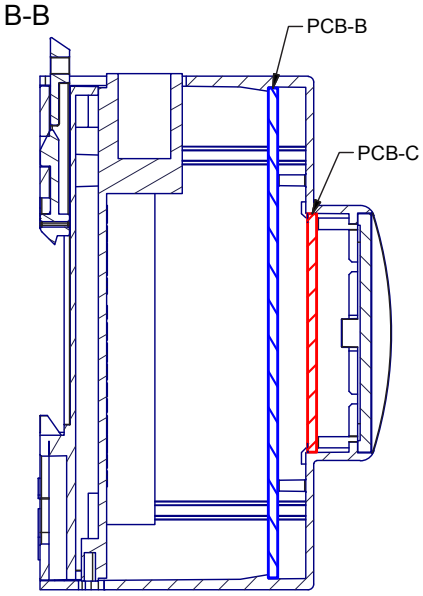

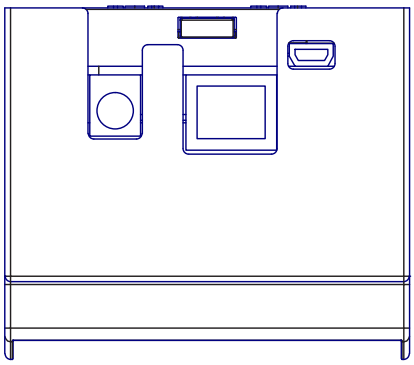

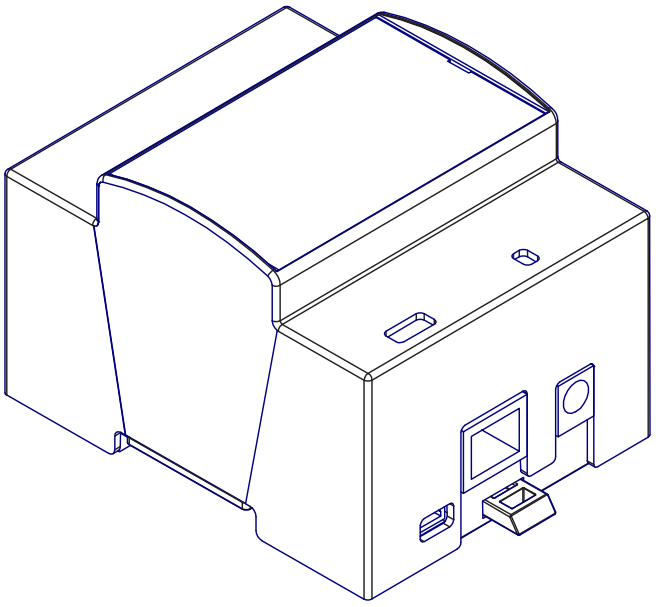

Hitaltech reserve the right to make changes without prior notice. Revision: 02 Date: 21/11/2013

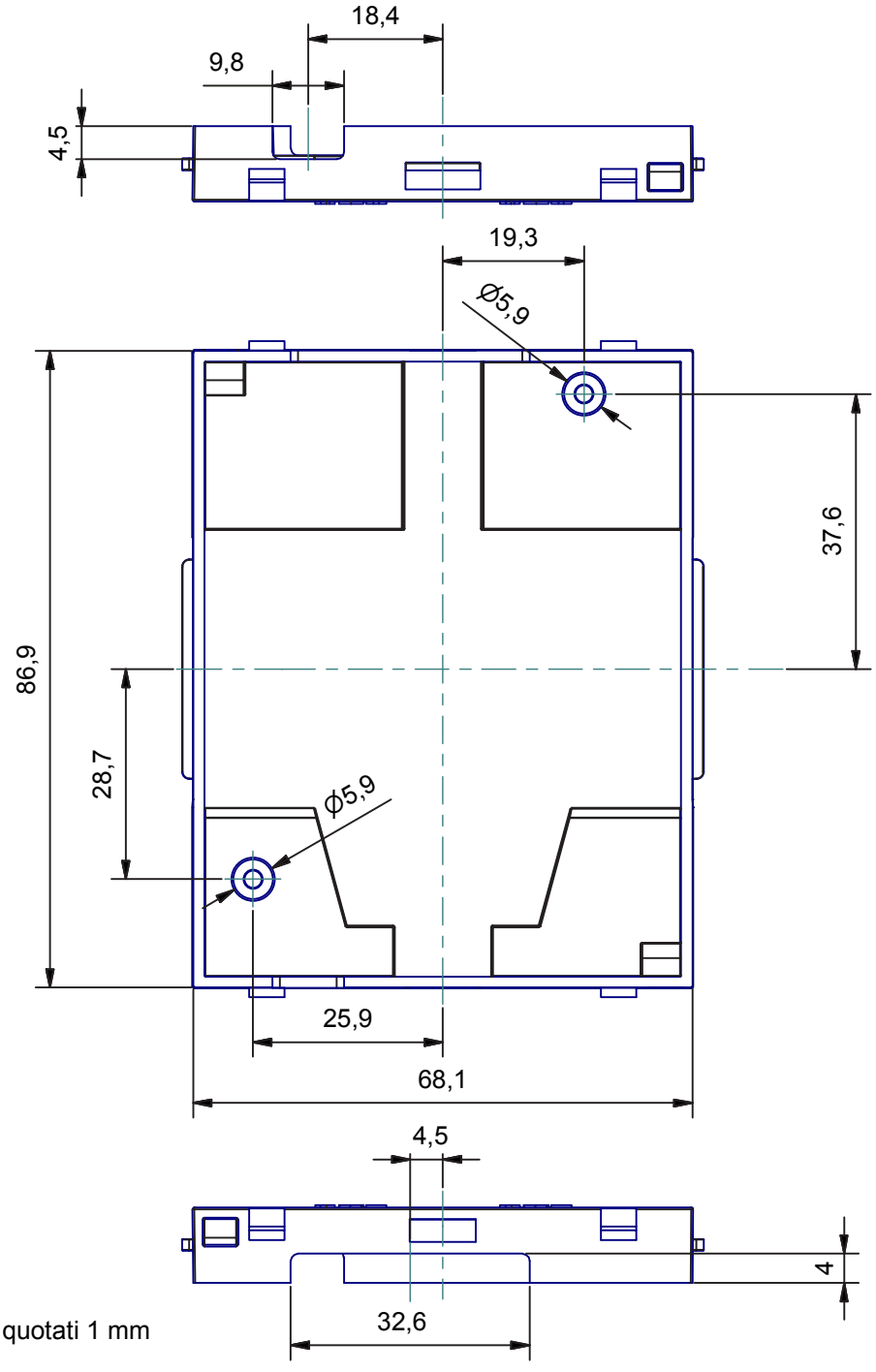

Raggi non quotati 1 mm

Base 4M for BeagleBone Black

Body Enclosure 4M for BeagleBone Black

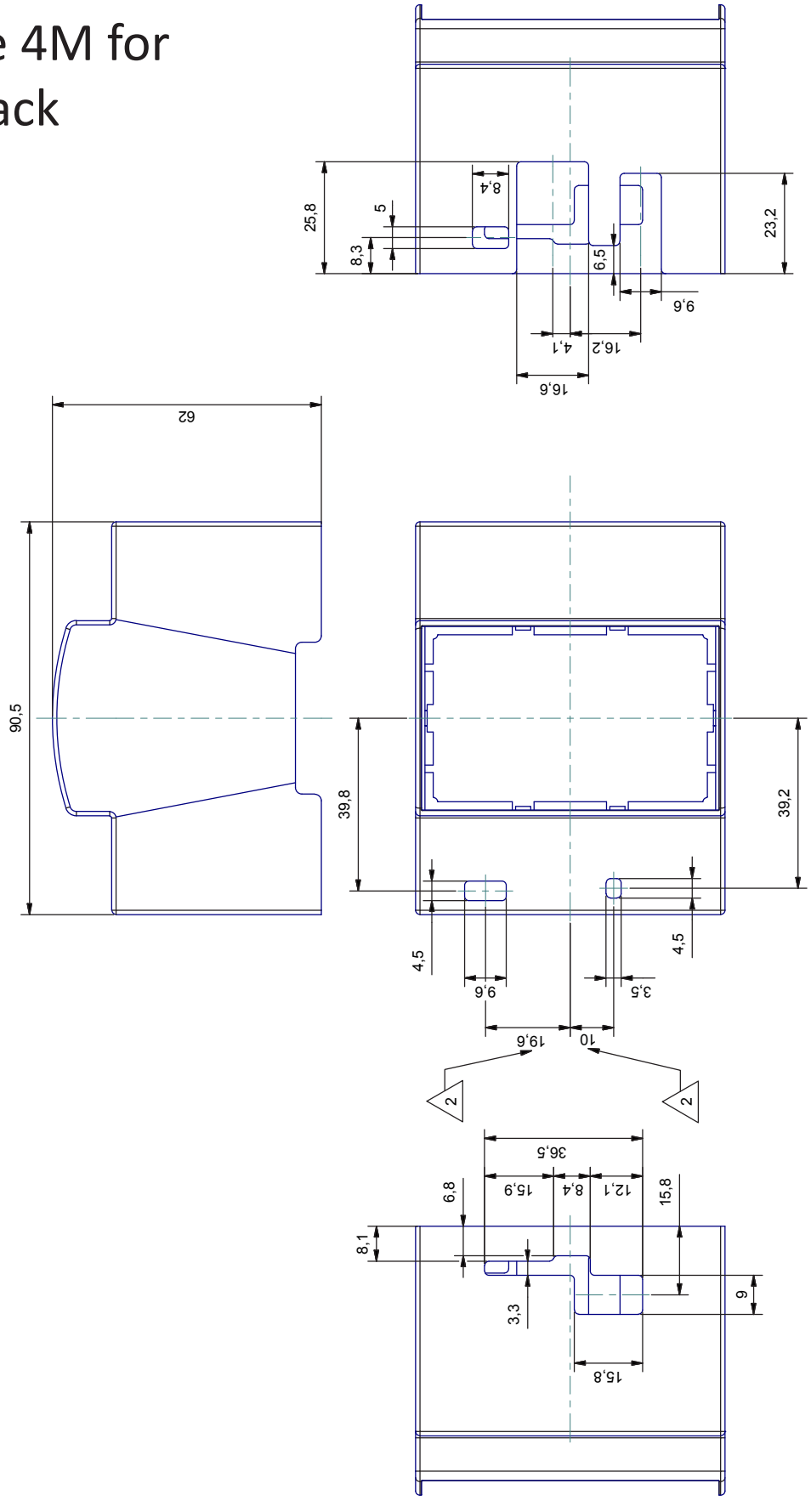

Hitaltech reserve the right to make changes without prior notice. Revision: 1 Date: