NEW MEGA WHEELS PSS

Double wall polyethylene tool trolley





General features

- HDPE roto-molded case with built-in rubber feet
- 2 metal lid safety support stays
- 2 TSA accepted locks
- telescopic handle and large wheels provided with ball bearings
- ergonomic handle, rubber coated grip
- single steel hinge, riveted in several points to assure high resistance
- large base area for tools, powertools, accessories and spare parts
- stackability
- document wallet
- 2 small component boxes

Internal Configuration

- 2 tool pallets with PSS™ system

Versions

NEW MEGA WHEELS PEL
NEW MEGA WHEELS PSS
NEW MEGA WHEELS PTS

EAN

8024482009131

Technical features	A	B	C	D	E
mm internal dimensions	453	345	185	75	110
	Weight Kg 8,00				
inc internal dimensions	17 13/16	13 9/16	7 5/16	2 15/16	4 5/16
	Weight lbs 17.63				

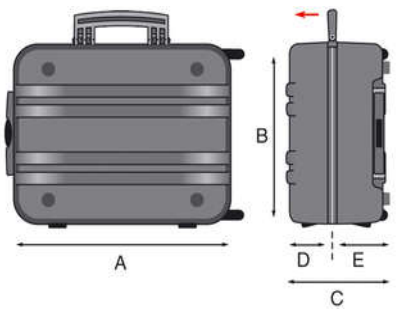

Copyright © 2022 - GT Line srl - Via del Lavoro, 9 - 40053 Loc. Crespellano Valsamoggia (Bologna) - Italy - Phone +39/051/65041 - Fax +39/051/734925
sales@gtline.com - www.gtline.com

NEW MEGA WHEELS PSS

Double wall polyethylene tool trolley

Tool trolley made entirely of HDPE polyethylene, a real shield against accidental shocks. High capacity case ideal for air travelling engineers that carry both tools, spare parts and components.
The TSA Locks allow the case to be checked at the airport by security officers, without destroying the locks.

THIS PRODUCT IS POWERED BY INTELLIRESPOND, the free App that allows for personal tool inventory and control of the content.
Please visit www.intellirespond.com

Copyright © 2022 - GT Line srl - Via del Lavoro, 9 - 40053 Loc. Crespellano Valsamoggia (Bologna) - Italy - Phone +39/051/65041 - Fax +39/051/734925
sales@gtline.com - www.gtline.com

Accessories

NEW MEGA WHEELS PSS



LOCK BELT



WL01



WL02



WL03



WL04



WL05

Copyright © 2022 - GT Line srl - Via del Lavoro, 9 - 40053 Loc. Crespellano Valsamoggia (Bologna) - Italy - Phone +39/051/65041 - Fax +39/051/734925

sales@gtline.com - www.gtline.com