BCC M323-0000-10-001-VX8334-050
Ordering code: BCC02P6

Connector

M08x1, 5m, PVC
No
Normally open (NO)

BALLUFF
sensors worldwide

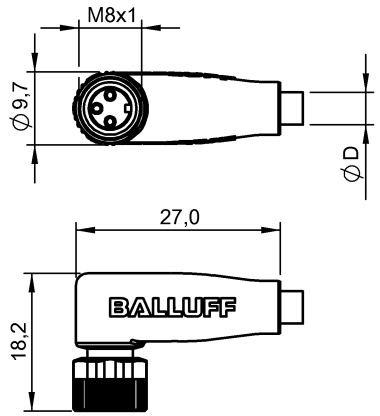

Characteristic data

Special properties	Drag chain compatible
Power-on indicator	No
Degree of protection as per IEC 60529	IP67
Cable jacket colour	gray
Special version	No
Function indicator (PIN 4)	No

Electrical data

Operating voltage UB max. AC	60 V
Operating voltage UB max. DC	60 V

Mechanical data

Number of conductors	3
Cable length	5 m
Connector type	M08x1
Conductor cross-section	0.34 mm²
Ambient temp. min. (drag chain)	-5 °C
Ambient temp. max. (drag chain)	60 °C
Ambient temp. min. (fixed)	-25 °C
Ambient temp. max. (fixed)	105 °C
Ambient temp. min. (moving)	-5 °C
Ambient temp. max. (moving)	105 °C
Sealing ring material	Viton
Cable jacket material	PVC
Acceleration max. (drag chain)	5 m/s²
Bending radius fixed cable	min. 5 x D
Bending radius repeated	min. 10 x D
Contact material	CuZn
Contact carrier material	PUR
Cover nut material	GD-Zn
Grip material	PUR
Permiss. horizon. traverse dist.	at 5 m/sec² 5 m
Traverse speed max (drag chain)	at 5 m horiz. travel 200 m/min
Permiss. vert. traverse dist.	at 5 m/sec² 2 m
Contact surface protection	Gold plated
Tightening torque pigtail	0.4 Nm
Design	angled
Bending cycles (in million)	> 2 Mio.
Cable diameter D	4.5 +/- 0.15 mm
System	molded
Number of sockets or pins	3

Basic data

Remarks

Additional features 1	Drag chain compatible

Enclosure type accord. to IEC 60529, when threaded together with the appropriate counterpart.
Cable structure according to UL-AWM Style 2517

Definitions see main catalog

subject to change

Internet : www.balluff.com
Balluff Germany : +49 (0) 7158 173-0, 173-370
Balluff USA : 1-800-543-8390
Balluff China : +86 (0) 21-50 644131

BCC M323-0000-10-001-VX8334-050
Ordering code: BCC02P6

Connector

M08x1, 5m, PVC
No
Normally open (NO)

BALLUFF
sensors worldwide

