Meech

Operating Manual

Energy Saving Safety Nozzles, Blow Guns, Air Amplifiers and High Thrust Jets

Contents

Section	Page
1. Introduction	5
Energy Saving Safety Nozzle	5
Energy Saving Safety Blowgun	6
Energy Saving Air Amplifier	7
Energy Saving High Thrust Jet	8
2. Safety and Inspection	9
3. Maintenance	10
Energy Saving Nozzle and Blowgun	10
Energy Saving Air Amplifier & High Thrust Jets	12
4. Dimensions	15
Dimensions of Air Nozzle	15
Dimensions of Air Amplifier Range	15
Dimensions of High Thrust Jet Range	16
Filters	16
5. Compressed Air Lines Sizes	17
Steps to calculating overall piping size for your compressed air system	17
How to determine what size of PIPE you need for compressed air lines	19
6. Installation	20
Energy Saving Safety Nozzle	20
Energy Saving Air Amplifier	20
High Thrust Jets	20
7. Operation	21
Energy Saving Safety Blowgun and Nozzle	21
Energy Saving Air Amplifier	22
Energy Saving High Thrust Jet	23
8. Troubleshooting	24

Products shown in this document may be covered by one or more patents, patents applied for and/or registered designs and/or trade marks. For further information please refer to our Head Office or visit www.meech.com.

© Meech Static Eliminators Ltd.

1. Introduction

Meech Air Technology products are designed to reduce the volume of compressed air at the point of application. They work by entraining ambient air into the compressed air supply, this increases the total volume of air allowing the air pressure and air consumption to be lowered. This manual covers the Meech range of Energy Saving Safety Nozzles, Blow Guns, Air Amplifiers and High Thrust Jets.

Energy Saving Safety Nozzle



Meech Energy Saving Safety Nozzles will fit easily to most existing open compressed air pipes. They have no moving parts and can save up to 70% of compressed air demand whilst also dramatically reducing noise levels. Meech Energy Saving Nozzles are fully adjustable, available in both Aluminium and Stainless Steel and come in 2 thread sizes.

This operating manual covers products:

- A48009-1/8 – ⅛" BSP Adjustable Nozzle (Aluminium)
- A40009-1/8 – ⅛" BSP Adjustable Nozzle (Stainless Steel)
- A48009-1/4 – ¼" BSP Adjustable Nozzle (Aluminium)
- A40009-1/4 – ¼" BSP Adjustable Nozzle (Stainless Steel)

Energy Saving Safety Blowgun



Energy Saving Safety Blowguns from Meech combine an ergonomic lightweight gun handle with the Meech Air Saver Nozzle.

The nozzle design entrains the ambient air at a 25:1 ratio. Meech blowguns typically save up to 70% of compressed air usage, when compared to conventional types of blowgun. They will also dramatically reducing noise levels.

This operating manual covers:

- A45400 – Air Saver Blow Gun with Aluminium Nozzle
- A45400SS – Air Saver Blow Gun with Stainless Steel Nozzle

Energy Saving Air Amplifier



Meech Air Technology Energy Saving Air Amplifiers provide large airflows whilst only consuming a minimal volume of compressed air. Air Amplifiers entrain ambient air at ratios of between 4 and 25:1 (model dependent).

Meech Air Amplifiers are available in six sizes in either stainless steel or aluminium

This operating manual covers products:

- A15004 – 9mm Air Amplifier (Aluminium)
- A15005 – 18mm Air Amplifier (Aluminium)
- A15008 – 32mm Air Amplifier (Aluminium)
- A15006 – 37mm Air Amplifier (Aluminium)
- A15015 – 51mm Air Amplifier (Aluminium)
- A15030 – 100mm Air Amplifier (Aluminium)
- A10008 - 32mm Air Amplifier (Stainless Steel)
- A10015 – 51mm Air Amplifier (Stainless Steel)
- A10030 – 100mm Air Amplifier (Stainless Steel)

Energy Saving High Thrust Jet



Meech Air Technology High Thrust Jets are designed to provide a high power blast of air whilst reducing compressor demand and lowering noise levels.

The High Thrust Jets are available in 4 sizes and will entrain air at ratios up to 12:1.

This operating manual covers:

- A38007 – Adjustable High Thrust Jet 9mm (Aluminium)
- A38008 – Adjustable High Thrust Jet 18mm(Aluminium)
- A38009 – Adjustable High Thrust Jet 34mm(Aluminium)
- A38038 – Adjustable High Thrust Jet 13mm (Brass)
- A38038-SS - Adjustable High Thrust Jet 13mm (Stainless Steel)
- A38044 – Inline Adjustable High Thrust Jet 13mm (Brass)
- A38044-SS – Inline Adjustable High Thrust Jet 13mm (Stainless Steel)

2. Safety and Inspection

All Meech products are packed carefully at our factory. Nevertheless, we recommend careful examination of the carton and contents for any damage.

To protect yourself and others when using compressed air, you should be aware of the following general safety guidelines:

- Warning – When compressed air is misused, it can cause serious injury or even death.
- Never point an air hose at anyone in fun or to remove dirt from clothing or the body.
- Never use compressed air without adequate eye and ear protection. Use safety glasses with side shields or goggles and ear protectors.
- Before attempting to disconnect a hose from an air line, the air should be cut off, and the remaining air bled from the line.
- Keep air hoses off the floor where they become tripping hazards and are subject to damage by vehicles, doors, and dropped tools. If possible, suspend air hoses from overhead.

3. Maintenance

Each product covered in this manual has no moving parts, making them virtually maintenance free. Clean compressed air moving through the products will not cause wear on any of the components.

Occasionally dirt, water or oil may enter the compressed air supply. This could hinder performance.

If this happens remove the product from the compressed air supply and clean the parts with soapy water, allow drying time and then reassemble.

When reassembling ensure you tighten all the components. If the parts are not tightened performance may be affected.

Energy Saving Nozzle and Blowgun

The Meech Nozzle breaks down into 3 parts (see technical drawing). To clean the nozzle insert a 2mm Hex Key into the end of the cone. Remove the 12mm grub screw and unscrew the cone from the body.

Once clean reassemble the cone and body, tighten the cone as far as it will go. To reset to the factory setting fully close the nozzle, turn open the cone until the line on the cone and body meet. The nozzle will then be set to consume 15 cfm (425 L/min) @ 80 psi (5.4 Bar).

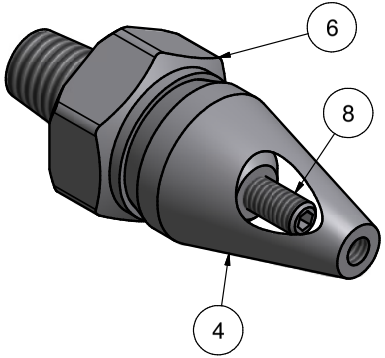

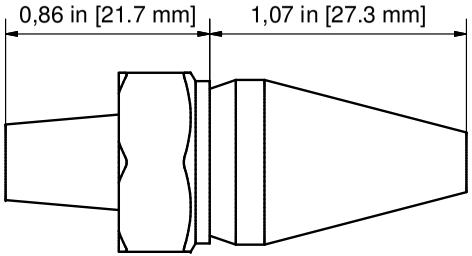

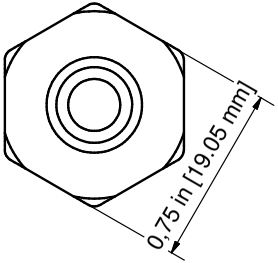

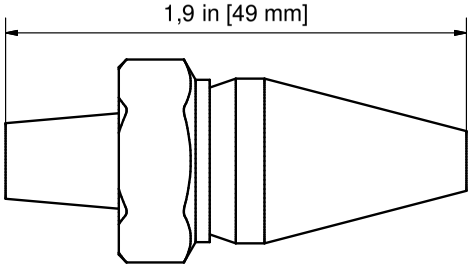

Meech International
2 Network Point
Range Road, Witney
OX29 0YN, UK
Tel: +44 (0) 1993 706700
Fax: +44 (0) 1993 776977
email: sales@meech.com
web: www.meech.com

COPYRIGHT © MEECH STATIC ELIMINATORS
THIS DOCUMENT AND THE INFORMATION THEREIN IS THE PROPERTY OF THE MEECH GROUP AND SHOULD NOT BE COPIED IN WHOLE OR PART OR USED FOR MANUFACTURE OR OTHERWISE DISCLOSED WITHOUT THE PRIOR WRITTEN CONSENT OF MEECH INTERNATIONAL

TITLE:
Air Saver Nozzle SS 1_4 BSPT

DRAWING No:
C0017 - Air Saver Nozzle

MATERIAL: Stainless Steel 303

FINISH: N/A

TOLERANCE
Machined Work Metric 0.2mm
Unmachined Fabrications 2mm
Angular 0.2°

DIMENSIONS
MM
DO NOT SCALE

PROJECTION	Sheet	Scale
	A4	2:1

Date:	Designed by:
27/05/2011	Colin Cooper

REVISION: A

SHEET:5 / 6

STATUS: For Production

PARTS LIST

ITEM	QTY	PART NUMBER
4	1	D50067 - Nozzle Cone
6	1	D50196 - Nozzle Nut
8	1	D50311 - M4 x 12 Grub Screw SS

Energy Saving Air Amplifier & High Thrust Jets

The Meech Air Amplifier and High Thrust Jet breaks down into 3 parts (see technical drawing). To clean the Air Amplifiers and High Thrust Jet, simply remove the locking ring and unscrew the barrel from the body.

Once clean reassemble the barrel into the body and tighten as far as it will go. Please be aware it may become harder to tighten the further you screw the barrel into the body. If needed, you can use a small amount of lubricant on the o-ring to allow it to tighten easier.

To reset to the factory setting, fully close the Air Amplifier or High Thrust Jet, then open the body of the Air Amplifier or High Thrust Jet until the line inside the body and the barrel meet. The Air Amplifier or High Thrust Jet will then be factor set, please note the setting will change depending on the model of Air Amplifier.

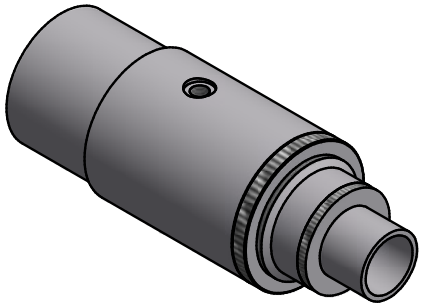

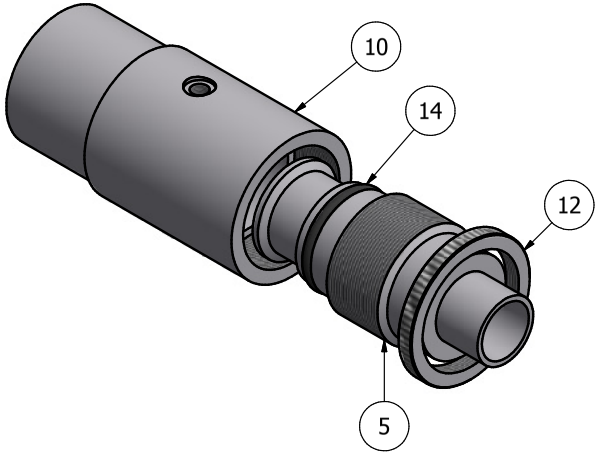

Meech International
2 Network Point
Range Road, Witney
OX29 0YN, UK
Tel: +44 (0) 1993 706700
Fax: +44 (0) 1993 776977
email: sales@meech.com
web: www.meech.com

COPYRIGHT © MEECH STATIC ELIMINATORS
THIS DOCUMENT AND THE INFORMATION THEREIN IS THE PROPERTY OF THE MEECH GROUP AND SHOULD NOT BE COPIED IN WHOLE OR PART OR USED FOR MANUFACTURE OR OTHERWISE DISCLOSED WITHOUT THE PRIOR WRITTEN CONSENT OF MEECH INTERNATIONAL

TITLE:
High Thrust Jet 25mm

DRAWING No:
C000009 - High Thrust Jet

MATERIAL: Aluminium

FINISH: Various

TOLERANCE
LINEAR .X ±0.2 .0.XX ±0.2
ANGULAR .X ±1°

DIMENSIONS
MM
DO NOT SCALE

PROJECTION

Sheet
A4

Scale
1:2

Date:
06/09/2010

Drawn by:
Colin Cooper

REVISION: A

SHEET:5 / 9

STATUS: For Production

PARTS LIST

ITEM	QTY	PART NUMBER	REV
5	1	D50351 - Barrel 25mm	B
10	1	D50350 - Jet Body 25mm	B
12	1	D50352 - Lock Ring	B
14	1	D50353 - Nitrile O Rings 41x5	A

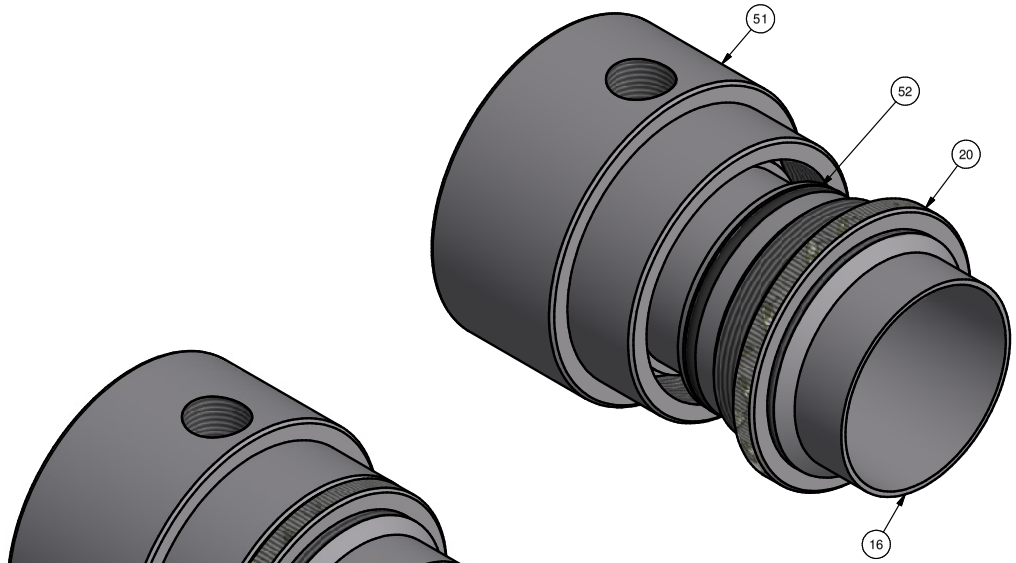

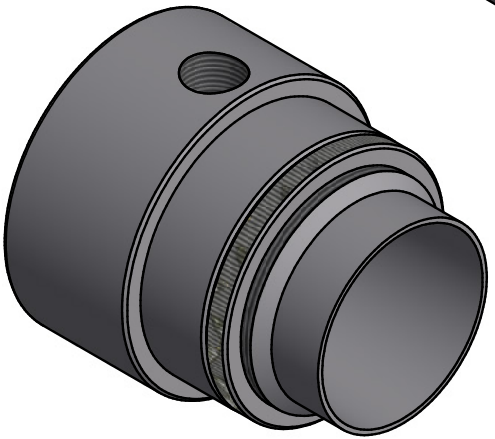

Meech International
2 Network Point
Range Road, Witney
OX29 0YN, UK
Tel: +44 (0) 1993 706700
Fax: +44 (0) 1993 776977
email: sales@meech.com
web: www.meech.com

COPYRIGHT © MEECH STATIC ELIMINATORS
THIS DOCUMENT AND THE INFORMATION THEREIN IS THE PROPERTY OF THE MEECH GROUP AND SHOULD NOT BE COPIED IN WHOLE OR PART OR USED FOR MANUFACTURE OR OTHERWISE DISCLOSED WITHOUT THE PRIOR WRITTEN CONSENT OF MEECH INTERNATIONAL

TITLE:
Medium Air Amplifier Assembly Al

DRAWING No:
C000002 - Air Amp 1.5" Al

MATERIAL: Aluminium

FINISH:Various

TOLERANCE
Machined Work Metric 0.2mm
Unmachined Fabrications 2mm
Angular 0.2°

DIMENSIONS
MM
DO NOT SCALE

PROJECTION	Sheet	Scale
	A4	1:1

Date:	Drawn by:
30/11/2012	Colin Cooper

REVISION: B

SHEET: 10 / 19

STATUS: For Production

REVISION HISTORY		
REV	DESCRIPTION	DATE
B	Part Revisions	30/11/2012

PARTS LIST			
ITEM	QTY	PART NUMBER	REV
16	1	D50325 - Barrel	B
20	1	D50326 - Lock Ring	A
51	1	D50324 - Air Amp Body 1.5"	B
52	1	D50071 - O Ring	A

4. Dimensions

Dimensions of Air Nozzle

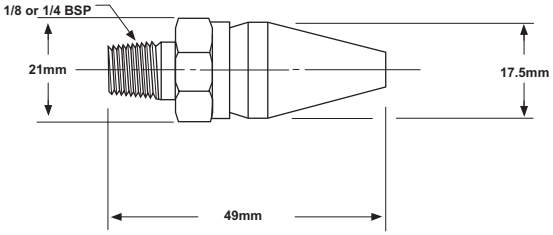

Dimensions of Air Amplifier Range

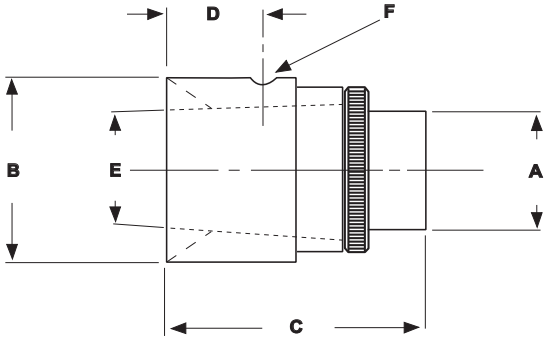

	A15004	A15005	A15008/ A10008	A15006	A15015/ A10015	A15030/ A10030
A	9	18	32	37	51	100
B	14	28	50	59	76	127
C	24	44	73	90	83	128
D	8	14	26	30	27	38
E	6	12	20	25	40	74
F	M5 x 6mm	M5 x 6mm	¼“ BSP	¼“ BSP	3/8“ BSP	1/2“ BSP

Dimensions of High Thrust Jet Range

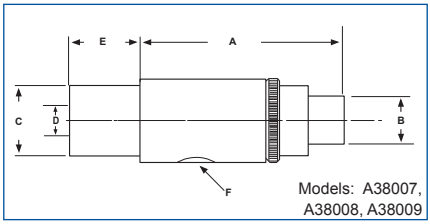

Models: A38007, A38008, A38009

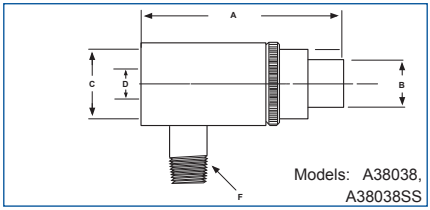

Models: A38038, A38038SS

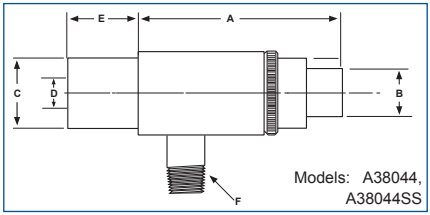

Models: A38044, A38044SS

	A38007	A38008	A38009	A38038/A38038SS	A38044/A38044SS
A	39	71	147	55	74
B	9	17	34	13	13
C	16	32	66	25	22
D	8	16	32	9.5	9.5
E	12	24	50	N/A	19
F	M5 x 6mm	⅛“ BSP	⅛“ BSP	⅛“ BSP	⅛“ BSP

Filters

It is recommended to use a 5-micron (or smaller) filter to remove water and dirt from the compressed air supply.

A 5 micron filter will remove 99% of foreign material from the air supply; the use of an oil filter with an effective filtration of 0.01 ppm will remove the oil droplets for an even cleaner compressed air supply.

Failure to use a filter may cause clogging of the Air Nozzle, Air Amplifier or High Thrust Jet.

5. Compressed Air Lines Sizes

Figuring the correct pipe size for your compressed air system is an important task. Pipe that is sized too small can create big pressure losses and reduce operating efficiency.

Many people who plan the piping never consider the fittings or the future.

FITTINGS: Every pipe fitting creates a certain amount of increased frictional air loss that is equal to a specified length of pipe. Any turns in the pipe at fittings, ells, tees, and valves increase pressure drops even more.

FUTURE: Are you planning to add more equipment in the next year or two? Then plan for larger piping now. Since the material costs in piping are low compared to installation or replacement cost, it's wise to select pipe of an adequate size. If there is any doubt that a pipe size may create a pressure drop, use the next largest size. Remember that an oversize pipe compensates for possible scale build-up and provides for future expansion of the overall air system.

Steps to calculating overall piping size for your compressed air system:

1. Determine your air compressor's maximum CFM.

2. Draw a piping schematic and show all pipe fittings, valves, etc.

3. Measure and write the corresponding lengths of pipe on your schematic, then total the length of all straight pipes needed and note that on your schematic.

4. Using TABLE 1 (over page), find your compressor's CFM number on the far left column, and then go to the right until you see the column header with nearest length in feet to your total pipe length. Find where the CFM & PIPE LENGTH intersect on the chart and it will show the recommended pipe size for that length.

5. Take that pipe size to TABLE 2 and use the table to find all the EQUIVELENT LENGTHS OF PIPE needed for each PIPE FITTING. Write these lengths on your piping schematic at each fitting

6. TOTAL all the EQUIVELENT LENGTHS OF PIPE needed for each PIPE FITTING and add to your total of straight length of pipe. This will give you a new and more accurate total pipe length needed.

7. Take your new total of EQUIVELENT LENGTH OF PIPE IN FEET back to TABLE 1 and use this number to determine the PIPE SIZE you need.

How to determine what size of PIPE you need for compressed air lines:

Your Air Compressor's CFM	TABLE 1: EQUIVALENT LENGTH OF PIPE LINES IN FEET *Don't forget to include *PIPE FITTINGS in your final calculations*							
	25 feet	50 feet	75 feet	100 feet	150 feet	200 feet	250 feet	300 feet
1	½	½	½	½	½	½	½	½
2	½	½	½	½	½	½	½	½
3	½	½	½	½	½	½	½	½
5	½	½	½	½	½	½	½	½
10	½	½	½	¾	¾	¾	¾	¾
15	½	¾	¾	¾	¾	¾	¾	¾
20	¾	¾	¾	¾	¾	¾	¾	¾
25	¾	¾	¾	¾	¾	1	1	1
30	¾	¾	¾	¾	1	1	1	1
35	¾	¾	1	1	1	1	1	1
40	¾	1	1	1	1	1	1	1
50	1	1	1	1	1	1	1	1
60	1	1	1	1	1 - 1/4	1 - 1/4	1 - 1/4	1 - 1/4
70	1	1	1	1	1 - 1/4	1 - 1/4	1 - 1/4	1 - 1/4
80	1 - 1/4	1 - 1/4	1 - 1/4	1 - 1/4	1 - 1/2	1 - 1/2	1 - 1/2	1 - 1/2
100	1 - 1/4	1 - 1/4	1 - 1/4	1 - 1/4	1 - 1/2	1 - 1/2	1 - 1/2	1 - 1/2
125	1 - 1/4	1 - 1/4	1 - 1/4	1 - 1/4	1 - 1/2	1 - 1/2	1 - 1/2	1 - 1/2
150	1 - 1/4	1 - 1/4	1 - 1/4	1 - 1/4	1 - 1/2	1 - 1/2	1 - 1/2	1 - 1/2
175	1 - 1/2	1 - 1/2	1 - 1/2	1 - 1/2	2	2	2	2
200	1 - 1/2	1 - 1/2	1 - 1/2	1 - 1/2	2	2	2	2
225	1 - 1/2	1 - 1/2	1 - 1/2	1 - 1/2	2	2	2	2
250	2	2	2	2	2	2	2	2
275	2	2	2	2	2	2	2 - 1/2	2 - 1/2
300	2	2	2	2	2	2	2 - 1/2	2 - 1/2
350	2	2	2	2	2 - 1/2	2 - 1/2	2 - 1/2	2 - 1/2
400	2	2	2	2	2 - 1/2	2 - 1/2	2 - 1/2	2 - 1/2
450	2 - 1/2	2 - 1/2	2 - 1/2	2 - 1/2	2 - 1/2	2 - 1/2	3	3
500	2 - 1/2	2 - 1/2	2 - 1/2	2 - 1/2	2 - 1/2	2 - 1/2	3	3
550	2 - 1/2	2 - 1/2	2 - 1/2	2 - 1/2	3	3	3	3
600	2 - 1/2	2 - 1/2	2 - 1/2	2 - 1/2	3	3	3	3
750	2 - 1/2	2 - 1/2	2 - 1/2	3	3	3	3	4
1000	3	3	3	3	3	3	4	4

TABLE 2: * EQUIVALENT LENGTH OF PIPE (FT.) for PIPE FITTINGS *Add these numbers for each pipe fitting to total length of straight pipe*					
Pipe Size	Long Rad, Ell or run of tee	STD. Ell or Run of reduced tee	Tee Thru side outlet	Globe Valve	Gate Valve
½	0.62	1.55	3.1	17.3	0.36
¾	0.82	2.06	4.12	22.9	0.48
1	1.05	2.62	5.24	29.1	0.61
1 - 1/4	1.38	3.45	6.9	38.3	0.81
1 - 1/2	1.61	4.02	8.04	44.7	0.94
2	2.07	5.17	10.3	57.4	1.21
2 - 1/2	2.47	6.16	12.3	68.5	1.44
3	3.07	6.16	15.3	85.2	1.79
4	4.03	7.67	20.2	112	2.35

6. Installation

Energy Saving Safety Nozzle

Meech Energy Saving Nozzles come with a choice of two male thread sizes, either 1/8” bsp or ¼” bsp.

The Nozzles will fit to any female threaded air fitting of the same size.

Energy Saving Air Amplifier

There are 6 different size Air Amplifiers, all with different size female threads. Please refer to dimension drawings in section 4 for individual sizes.

All Air Amplifiers will fit to any male threaded air fitting of the same size. Typically they are connected to a standard push fit air connector.

High Thrust Jets

There are 3 x Aluminium High Thrust Jets with female fittings and 2 x Brass (Stainless Steel) High Thrust Jets. Please refer to dimension drawings in section 4 for individual sizes.

All High Thrust Jest will fit to any male threaded air fitting of the same size. Typically they are connected to a standard push fit air connector.

7. Operation

Energy Saving Safety Blowgun and Nozzle

The Meech Energy saving Blowguns and Nozzles run at 78dBA (The UK regulated tolerable noise level is 85dBA), when set at 80 psi (5.4 Bar).

They are factory set to consume 15cfm @ 80 psi (5.4 Bar), however any adjustment made to the position of the cone will affect the air consumption and velocity of the air exiting the nozzle.

The Meech Nozzle works by forcing compressed air through an adjustable circular slot at the base of the cone. Air is then directed on the outside of the cone (no air exits from the end of the Nozzle). As the air is forced over the nozzle ambient air is entrained into the compressed air supply at ratios of 25:1. This increases the total volume of air hitting the target.

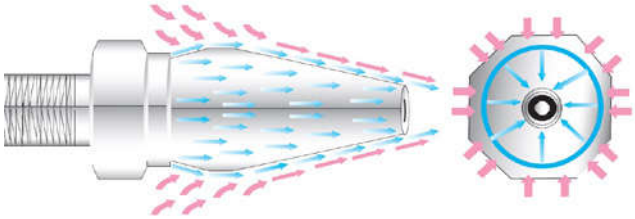

		Sound level (dBA)				
Inlet air pressure	PSI	20	40	60	80	100
	Bar	1.4	2.7	4.1	5.4	6.8
Product Code	Size (outlet)					
A48009/A40009	1/8" & 1/4"	67	74	79	82	84

Energy Saving Air Amplifiers

The Meech Energy saving Air Amplifiers are designed to provide large air flows whilst consuming a minimal volume of compressed air and reducing noise levels.
The table below shows the noise level of each size air amplifier when set to various pressures.

Air Amplifiers work by releasing a small amount of compressed air through an adjustable circular slot inside the Air Ampifier. This creates a “tube” of air, this then travels on the inside of the Air Amplifier towards the front. This process creates areas of low pressure behind the and infront that entrain ambient air, this air is entrained at ratios’ of between 4 and 25:1 (model dependent)

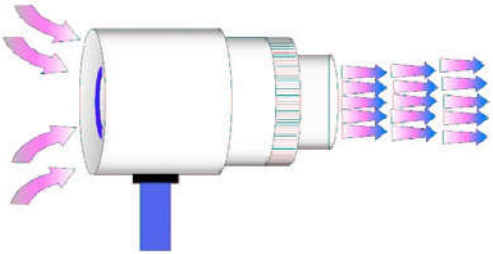

		Sound level (dBA)				
Inlet air pressure	PSI	20	40	60	80	100
	Bar	1.4	2.7	4.1	5.4	6.8
Product Code	Size (outlet)					
A15004	9mm	73	82	86	88	90
A15005	18mm	70	75	82	83	86
A15008 / A10008	32mm	59	73	76	79	83
A15006	37mm	66	77	82	83	86
A15015 / A10015	51mm	59	69	75	78	83
A15030 / A10030	100mm	59	68	73	75	78

Energy Saving High Thrust Jets

The Meech Energy Saving High Thrust Jets are designed to provide a high power blast of air whilst reducing compressor demand and lowering noise levels.

Meech High Thrust Jets work by releasing a small amount of air through an adjustable circular slot inside the High Thrust Jet. This creates a “tube” of air, this then travels on the inside of the High Thrust Jet towards the front.

This process creates areas of low pressure behind the and infront that entrain ambient air, this air is entrained at ratios’ of between 4 and 20:1 (model dependent)

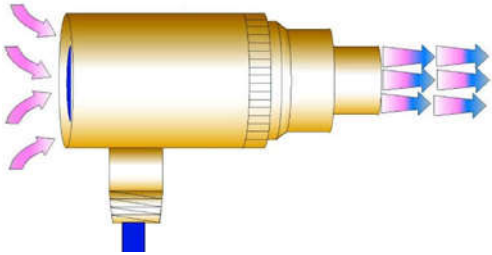

		Sound level (dBA)				
Inlet air pressure	PSI	20	40	60	80	100
	Bar	1.4	2.7	4.1	5.4	6.8
Product Code	Size (outlet)					
A38007	9mm (Aluminium)	72	79	82	87	90
A38038 / A38038SS	13mm (Brass)	75	80	85	90	94
A38008	17mm (Aluminium)	65	73	77	80	82
A38009	34mm (Aluminium)	69	77	78	80	83

8. Troubleshooting

Air Flow

Problems with compressed air flow can be caused by:

1. Air pressure too low – increase air pressure at the relevant regulator.

2. Undersized compressed air lines – replace pipes with correct sizes, see Compressed Air Lines Sizes section.

3. Blocked compressed air line – remove blockage.

4. Insufficient compressor size – Check compressor size for fitting.

Energy Saving Safety Blowgun and Nozzle

1. Nozzle cone is loose – check grub screw, located in the end of the Nozzle is in place and tight.

2. Air escaping around the air inlet – PTFE Tape can be used to seal the air inlet.

Energy Saving Air Amplifiers

1. Insufficient air flow – check the back of the air amplifer is not being obstruted. Air needs to flow freely through the Air Amplifier.

2. No air is coming through the Air Amplifier – Check to see if the Air Amplifier barrel had been screwed to far into the body.

Energy Saving High Thrust Jet

1. Insufficient air flow – check the back of the air amplifer is not being obstruted. Air needs to flow freely through the Air Amplifier.

2. No air is coming through the Air Amplifier – Check to see if the Air Amplifier barrel had been screwed to far into the body.

Meech International (UK)
2 Network Point
Range Road, Witney
OX29 0YN, UK

Tel: +44 (0)1993 706700
Fax: +44 (0)1993 776977
email: sales@meech.com

Meech CE
2151 Fót
Széchenyi út. 46
Hungary

Tel: +36 27535075
Fax: +36 27535076
email: ce@meech.com

Meech Static Eliminators USA Inc
2915 Newpark Drive
Norton, OH 44203
USA

Tel: +1 330 564 2000 / 1 800 232 4210
Fax: +1 330 564 2005
email: info@meech.com

Meech Static Eliminators (Shanghai) Co. Ltd
Room 205, Huana Hotel Office Tower
No. 1733 Lianhua Road
Shanghai 201103
China

Tel: +86 400 820 0102
Fax: +86 400 820 0102*201
email: china@meech.com

Meech Elektrostatik SA
Kaiserbaracke 66
B-4780 St.Vith
Belgium

Tel: +32 8086 2983
Fax: +32 8086 2821
email: mesa@meech.com

Meech Shavotech
Shavo House, Survey No.21A / 10 B, Plot No.394
South Main Road, Koregaon Park,
PUNE 411 001
India

Tel: 020-26069641/ 26069642,
Fax: 020-26069644
e-mail: india@meech.com