FILE AMEND NOTE	DATE	REV.
ORIGINAL EDITION	JUN 19 2020	B/0

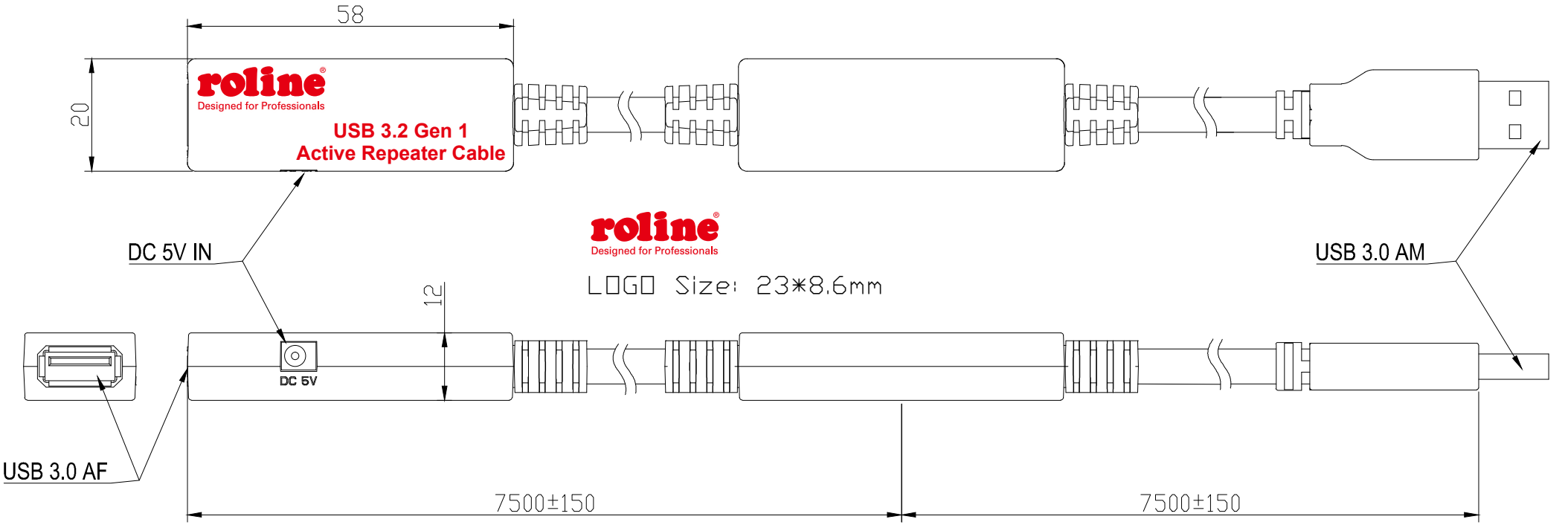

NOTE:

1.CABLE:USB 3.0 UL20276(1P#26+D+AL+Mylar)*2C+1P#26+2C#22+AL+B O6.0 Black
PVC JACKET :PVC 45P COLOR BLACK
CABLE PRINTED :NO

2.CONNECTOR:
P1:3.0Ver USB_A M. Blue Insulator.Shell Nickel Plated.Contact Gold Plated.
P2:3.0Ver USB_A F. Blue Insulator.Shell Nickel Plated.Contact Gold Plated.

3.DC IN:DC 5V. Ø3.5mm.

4.HOOD:Injection Molding ,ABS,COLOR:BLACK.

5.CABLE TEST REQUEST:
(1) 100% OPEN SHORT & MIS WIRE TEST .
(2) CONDUCTIVE RESISTANCE: 3 OHM Max .
(3) INSULATION RESISTANCE: 10M OHMS Min .
(4) INSULATION Voltage: 300V DC/10ms.
(5) HI-Pot: AC300V,10ms.
(6) All Test Duability: 0.1SEC.

NAME	ROLINE USB3.2 Gen1 Active Repeater Cable 15m		
Item No.	12.04.1071		
SECOMP	MAPE	TOLERANCE	
		X. ±1.00 X.X ±0.50	
	DRAW BY	SCALE	MM
		PAGE	1/1