**JUMO GmbH & Co. KG**
Delivery address: Mackenrodtstraße 14
36039 Fulda, Germany
Postal address: 36035 Fulda, Germany
Phone: +49 661 6003-0
Fax: +49 661 6003-607
E-mail: mail@jumo.net
Internet: www.jumo.net

**JUMO Instrument Co. Ltd.**
JUMO House
Temple Bank, Riverway
Harlow, Essex CM20 2DY, UK
Phone: +44 1279 635533
Fax: +44 1279 635262
E-mail: sales@jumo.co.uk
Internet: www.jumo.co.uk

**JUMO Process Control, Inc.**
6733 Myers Road
East Syracuse, NY 13057, USA
Phone: 315-437-5866
1-800-554-5866
Fax: 315-437-5860
E-mail: info.us@jumo.net
Internet: www.jumousa.com



# Bimetal Dial Thermometer
## Transformer version

## Special features

- Class 1.5
- Display ranges -20°C to +120°C
- Stainless steel case
- Case size: ∅ 80 mm
- Protection type IP 55



**Type 608005/1080**

## Brief description

Dial thermometers in transformer version
are devices which can be universally used for local temperature measurement.

## Technical data

| | |
|---|---|
| **Basic type extension** | 1080 |
| **Case** | Case and bezel made of stainless steel (1.4301) |
| **Protection type** | IP 55 according to DIN EN 60529 |
| **Front pane** | Acrylic glass (PMMA) |
| **Scale** | White, with black lettering |
| **Display** | Class 1.5 similar to DIN EN 13190 |
| **Time constant $t_{0.632}$** | Approx. 20 s, measured in flowing water with a probe Ø of 10 mm made of stainless steel |
| **Influential effect of the ambient temperature** | No influence |
| **Limit value temperatures** | -30 to +80°C (storage and transport -30 to +80°C) |
| **Rated position** | Any |

**JUMO GmbH & Co. KG**
Delivery address: Mackenrodtstraße 14
36039 Fulda, Germany
Postal address: 36035 Fulda, Germany
Phone: +49 661 6003-0
Fax: +49 661 6003-607
E-mail: mail@jumo.net
Internet: www.jumo.net

**JUMO Instrument Co. Ltd.**
JUMO House
Temple Bank, Riverway
Harlow, Essex CM20 2DY, UK
Phone: +44 1279 635533
Fax: +44 1279 635262
E-mail: sales@jumo.co.uk
Internet: www.jumo.co.uk

**JUMO Process Control, Inc.**
6733 Myers Road
East Syracuse, NY 13057, USA
Phone: 315-437-5866
1-800-554-5866
Fax: 315-437-5860
E-mail: info.us@jumo.net
Internet: www.jumousa.com



| Display range (AB) | Display range in °C | Measuring range in °C | Tolerance in K (+/-) |
|---|---|---|---|
| 643 | -20 to +120 | 0 to +100 | 3.0 |
| 818 | 0 to +120 | +20 to +120 | 3.0 |

# Dimensions

**Type:**
608005/1080

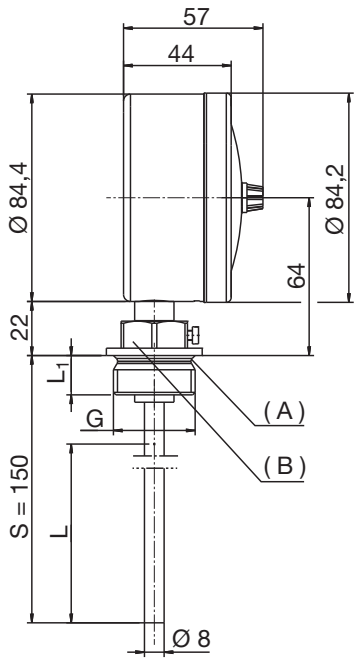


**Extra code 434**

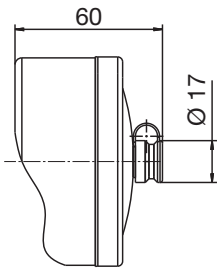


| G | L1 | L (active probe dimension) |
|---|---|---|
| G1/2A | 14 | 75 |
| G3/4A | 16 | |
| G1A | 16 | |

(A) = Screw-in spigot, DIN 3852, form A
(B) = SW

# Devices in stock

| Part no. | Type | Display range | Temperature probe, process connection, material | Protection tube<br>Dimension "S" |
|---|---|---|---|---|
| 00483589 | 608005/1080-643-874-8-106-97-150/430, 522<br>with drag indicator | -20 to +120 °C | TF 05, d = 8 mm<br>TA 24, "G 1" CuZn | Stainless steel<br>150 mm |

**Attention:** only for devices in stock **– Packaging unit 3 pieces –** Quantity ordered must be divisible by 3!

**JUMO GmbH & Co. KG**
Delivery address: Mackenrodtstraße 14
36039 Fulda, Germany
Postal address: 36035 Fulda, Germany
Phone: +49 661 6003-0
Fax: +49 661 6003-607
E-mail: mail@jumo.net
Internet: www.jumo.net

**JUMO Instrument Co. Ltd.**
JUMO House
Temple Bank, Riverway
Harlow, Essex CM20 2DY, UK
Phone: +44 1279 635533
Fax: +44 1279 635262
E-mail: sales@jumo.co.uk
Internet: www.jumo.co.uk

**JUMO Process Control, Inc.**
6733 Myers Road
East Syracuse, NY 13057, USA
Phone: 315-437-5866
1-800-554-5866
Fax: 315-437-5860
E-mail: info.us@jumo.net
Internet: www.jumousa.com



# Order details

| Order code | | |
|---|---|---|
| | **(1)** | **Basic type** |
| | | Mechanical dial thermometer, transformer version class 1.5 with drag indicator |
| | | Design type 10 Case size Ø |
| 608005/1080 | 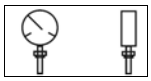 | 80 mm |
| | **(2)** | **Display range (AB) in °C** |
| 643 | | -20 to +120 |
| 818 | | 0 to +120 |
| | **(3)** | **Process connection (PC)** |
| 874 | TA 24 | Protection tube with screw connection, O ring seal and clamping screw |
| | **(4)** | **Ø Process connection (PC)** |
| 8 | | 8 mm |
| | **(5)** | **Thread type of process connection (PC)** |
| 104 | | Screw connection G 1/2 |
| 105 | | Screw connection G 3/4 |
| 106 | | Screw connection G 1 |
| | **(6)** | **Probe material** |
| 97 | | Stainless steel (1.4571) – TF / Brass – TA |
| | **(7)** | **Insertion length, process connection (PC) dimension "S"** |
| 150 | | 150 mm |
| . . . | | Special length (specifications in plain text – 50 mm increments) |
| | **(8)** | **Extra code (TZ)** |
| 000 | | Without extra code |
| 434 | | Drag indicator can be adjusted with a screwdriver, protected by a cover |
| 522 | | Customized scale |



**Special versions upon request!**

| | (1) | | (2) | | (3) | | (4) | | (5) | | (6) | | (7) | | (8) | | |
|---|---|---|---|---|---|---|---|---|---|---|---|---|---|---|---|---|---|
| **Order code** | 608005/. . . . | - | . . . | - | . . . | - | . | - | . . . | - | . . | - | . . . | / | . . . | , | . . . |
| **Order example** | 608005/1080 | - | 818 | - | 874 | - | 8 | - | 106 | - | 97 | - | 150 | / | 000 [a] | , | . . . |

[a] List extra codes in sequence, separated by commas.

**Caution:** only for devices in stock **– Packaging unit 3 pieces –** Quantity ordered must be divisible by 3!

**Note:** Contact thermometer temperature probe, refer to data sheet 608540.
For temperature indicator and contact dial thermometer with capillary, refer to data sheet 608201 and 608520.