CABLE MANAGEMENT

21500 MONTBARD
Phone : 03.80.89.58.15 - Fax : 03.80.92.09.67

CONSOLE CAT40
CAT40 BRACKET

Reference(s) : 586 190/194/197

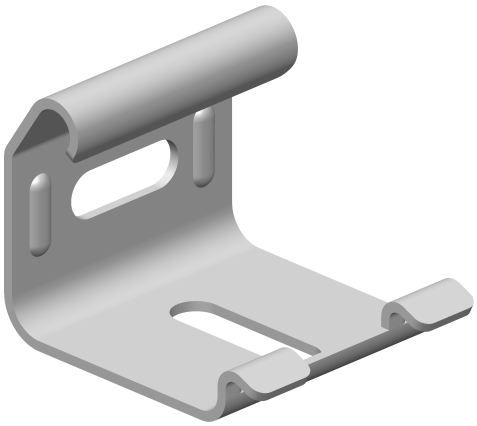

1. GAMME / *RANGE*

Designation	Code	Poids / *Weight* (Kg)	(lb)	Epaisseur / *Thickness* (mm)	(inch)	Matière / *Material*	Norme / *Standard*	Finition / *Coating*	Classe de résistance contre la corrosion/ *Resistance class against corrosion*
CAT40 GS	586 190	0.047	*0.104*	1.5	*0.059*	DX51D Z275	GS / PG	GS / PG	Class 3 / IEC 61537
CAT40 ZnNi	586 197					S 235 JR	EN 10 025	ZnNi	Class 8 / IEC 61537
CAT40 316L	586 194					X2 Cr Ni Mo17-12-2	EN 10 088-2	IN 316L / SS316L	Class 9D / IEC 61537

2. DIMENSIONS (mm/*inch*)

