PV2804

Pressure switch with IO-Link

PV-010-REG18-UFRVG/US/ /

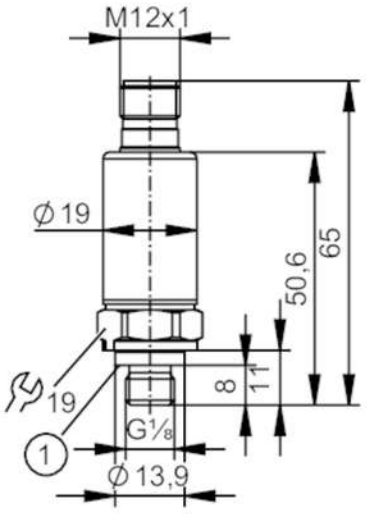

1 Sealing

Product characteristics				
Number of inputs and outputs		Number of digital outputs: 2		
Measuring range		-1...10 bar	-14.5...145 psi	-100...1000 kPa	-0.1...1 MPa
Process connection		threaded connection G 1/8 external thread (DIN EN ISO 1179-2); internal thread:M5		
Application				
Measuring element		metallic thin film cell		
Application		for industrial applications		
Media		liquids and gases		
Medium temperature	[°C]	-40...90		
Min. bursting pressure		300 bar	4350 psi	30 MPa
Pressure rating		25 bar	360 psi	2.5 MPa
Note on pressure rating		static		
Vacuum resistance		-1000 mbar	-0.1 MPa	
Type of pressure		relative pressure; vacuum		
Electrical data				
Operating voltage	[V]	18...30 DC		
Current consumption	[mA]	< 15		
Min. insulation resistance	[MΩ]	100; (500 V DC)		
Protection class		III		
Reverse polarity protection		yes		
Power-on delay time	[s]	< 0.3		
Inputs / outputs				
Number of inputs and outputs		Number of digital outputs: 2		
Outputs				
Total number of outputs		2		
Output signal		switching signal; IO-Link; (configurable)		
Electrical design		PNP/NPN		
Number of digital outputs		2		

PV2804

Pressure switch with IO-Link

PV-010-REG18-UFRVG/US/ /

Output function		normally open / normally closed; (parameterisable)		
Max. voltage drop switching output DC	[V]	2		
Permanent current rating of switching output DC	[mA]	100		
Switching frequency DC	[Hz]	< 170		
Short-circuit protection		yes		
Type of short-circuit protection		pulsed		
Overload protection		yes		
Measuring/setting range				
Measuring range		-1...10 bar	-14.5...145 psi	-100...1000 kPa	-0.1...1 MPa
Set point SP		-0.9...10 bar	-13.1...145 psi	-0.09...1 MPa
Reset point rP		-0.95...9.95 bar	-13.8...144.3 psi	-0.095...0.995 MPa
In steps of		0.005 bar	0.1 psi	0.0005 MPa
Factory setting		SP1 = 4.5 bar	rP1 = 3.5 bar	ou1 = Hno;
		SP2 = 1.9 bar	rP2 = 1 bar	ou2 = Hnc;
		dS1/dS2 = 0 ms	dr1/dr2 = 0 ms	
		coF = 0 %	P-n = PnP	dAP= 60 ms
Accuracy / deviations				
Switch point accuracy	[% of the span]	< ± 0,5 (nach DIN EN 61298-2)		
Repeatability	[% of the span]	< ± 0,05; (with temperature fluctuations < 10 K)		
Characteristics deviation	[% of the span]	< ± 0,5; (linearity incl. hysteresis and repeatability, limit value setting to DIN EN IEC 62828-1)		
Linearity deviation	[% of the span]	< ± 0,1 (BFSL) / < ± 0,2 (LS)		
Hysteresis deviation	[% of the span]	< ± 0,2		
Long-term stability	[% of the span]	< ± 0,1; (per 6 months)		
Temperature coefficient zero point	[% of the span / 10 K]	< 0,1 (-25...90 °C) / < 0,2 (-40...-25 °C)		
Temperature coefficient span	[% of the span / 10 K]	< 0,1 (-25...90 °C) / < 0,2 (-40...-25 °C)		
Response times				
Response time	[ms]	< 3		
Software / programming				
Parameter setting options		hysteresis / window; normally open / normally closed; switching logic; switch-on/switch-off delay; Damping		
Interfaces				
Communication interface		IO-Link		
Transmission type		COM2 (38,4 kBaud)		
IO-Link revision		1.1		
SDCI standard		IEC 61131-9		
Profiles		Smart Sensor: Process Data Variable; Device Identification, Device Diagnosis		

PV2804

Pressure switch with IO-Link

PV-010-REG18-UFRVG/US/ /

SIO mode		yes	
Required master port type		A	
Process data analogue		2	
Process data binary		2	
Min. process cycle time	[ms]	5	
Supported DeviceIDs		**Type of operation**	**DeviceID**
		default	1564
Operating conditions			
Ambient temperature	[°C]	-40...90	
Storage temperature	[°C]	-40...100	
Protection		IP 67; IP 69K	
Tests / approvals			
EMC		DIN EN 61326-1	
Shock resistance		DIN EN 60068-2-27	500 g (1 ms)
Vibration resistance		DIN EN 60068-2-6	20 g (10...2000 Hz)
MTTF	[years]	667	
UL approval		UL Approval no.	J015
		File number UL	E174189
Pressure Equipment Directive		Sound engineering practice; can be used for group 2 fluids; group 1 fluids on request	
Mechanical data			
Weight	[g]	53.9	
Housing		cylindrical	
Dimensions	[mm]	Ø 19 / L = 65	
Materials		stainless steel (630/1.4542/17-4 PH); stainless steel (316L/1.4404); PEI	
Materials (wetted parts)		stainless steel (630/1.4542/17-4 PH)	
Min. pressure cycles		60 million; (at 1.2 times nominal pressure)	
Tightening torque	[Nm]	20...25; (recommended tightening torque; depends on lubrication, seal and pressure rating)	
Process connection		threaded connection G 1/8 external thread (DIN EN ISO 1179-2); internal thread:M5	
Process connection sealing		FKM (DIN EN ISO 1179-2)	
Restrictor element integrated		no	
Remarks			
Remarks		BFSL = Best Fit Straight Line	
		LS = limit value setting	
Pack quantity		1 pcs.	

Electrical connection

Connector: 1 x M12; coding: A

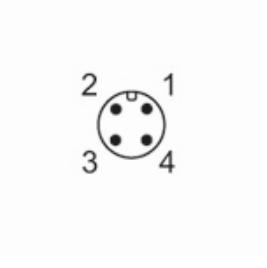

PV2804

Pressure switch with IO-Link

PV-010-REG18-UFRVG/US/ /

Connection

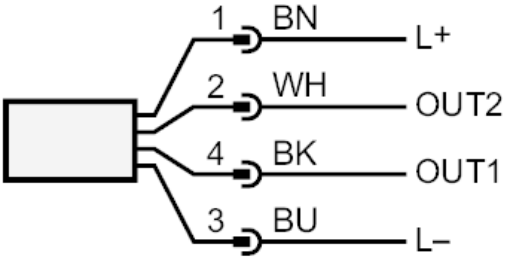

OUT1	switching output IO-Link
OUT2	switching output
	colours to DIN EN 60947-5-2
	Core colours :
BK =	black
BN =	brown
BU =	blue
WH =	white