TI01585K/09/EN/01.21
71532104
2021-05-03

Technical Information
RNB22

System power supply unit 24 V DC / 2.5 A



System power supply unit 24 V DC / 2.5 A with function monitoring

Application

- System power supply unit with wide-range input 100 to 240 V_{AC} / 110 to 250 V_{DC}
- Primary switch mode power supply unit, single-phase, output 24 V_{DC} / 2.5 A
- Dynamic and static boost: 5 A / 3.125 A
- For redundant system power supply via RNF22 power supply and error message module
- Power supply especially for decentralized applications or cabinets in which only 230 V_{AC} and not 24 V_{DC} is available
- For ambient temperatures –25 to 70 °C (–13 to 158 °F)

Your benefits

- Preventive function monitoring reports critical operating states before errors occur
- High efficiency and long service life with low levels of power dissipation and heating
- Space-saving installation in cabinet due to slim and flat design

Endress+Hauser
People for Process Automation

Table of contents

Function and system design 3
Product description 3
Dependability 3

Input 3
Input data 3

Output 4
Output data 4
Output data signals 5

Energy supply 5
Terminal assignment 5
Connecting the supply voltage 5
Terminals 5

Performance characteristics 5
Performance characteristics 5
Boost currents 6

Installation 7
Mounting location 7
Installing a DIN rail device 7

Environment 8
Important ambient conditions 8
Derating 8
Shock and vibration resistance 9
Electromagnetic compatibility (EMC) 9
Standards 9

Mechanical construction 9
Design, dimensions 9
Weight 9
Color 9
Materials 9

Display and operating elements 10
Local operation 10

Ordering information 11

Accessories 11
Service-specific accessories 11

Certificates and approvals 11
CE mark 12

Supplementary documentation 12
Operating Instructions (BA) 12
Supplementary device-dependent documentation 12

Function and system design

Product description

Product design

System power supply unit24 V_{DC}

The RNB22 power supply unit is used to power 24 V_{DC} DC devices of the RN Series. It offers maximum plant availability combined with minimum size in the power range up to 100 W. Preventive function monitoring and a powerful reserve capacity are also available for applications in the low power range.

Dependability

Our warranty is valid only if the device is installed and used as described in the Operating Instructions.

Input

Input data

Unless otherwise specified, all specifications apply for an ambient temperature of 25 °C, an input voltage of 230 V_{AC} and a nominal output current of (I_N).

Input voltage range	100 to 240 V_{AC} −15 to +10 % 110 to 250 V_{DC} −20 to +40 %
Dielectric strength max.	300 V_{AC}, 30 s
Frequency range (f_N)	50 to 60 Hz −10 to +10 %
Current consumption (for nominal values) typical [1]	0.85 A (100 V_{AC}) 0.7 A (120 V_{AC}) 0.39 A (230 V_{AC}) 0.37 A (240 V_{AC}) 0.75 A (110 V_{DC}) 0.33 A (250 V_{DC})
Discharge current to PE typical	< 0.25 mA (264 V_{AC}, 60 Hz) 0.22 mA (264 V_{AC}, 60 Hz)
Mains buffering	> 54 ms (120 V_{AC}) > 54 ms (230 V_{AC})
Switch-on time (typical)	500 ms
Protective circuit	Transient surge protection varistor
Switch-on current surge limit 1 ms(typical)	4.3 A
Switch-on current surge I^2t	< 0.1 A^2s
Input fuse, slow-blow, internal	3.15 A

1) The specified values for current consumption apply for operation in static boost (P_N x 125 %)

During the first few microseconds, the current flow into the filter capacitors is excluded.

The SCCR value (short-circuit current rating) of the power supply unit corresponds to the SCCR value of the backup fuse (see input protection table).

Input protection, AC (to be connected externally upstream)

Input current I_{In} Input protection	Circuit breaker				
Characteristics	A	B	C	D	K
6 A	-	✔	✔	-	-
8 A	-	✔	✔	-	-
10 A	-	✔	✔	-	-

Input current I_{In} Input protection	Circuit breaker				
13 A	-	✔	✔	-	-
16 A	-	✔	✔	-	-

Dielectric strength of insulation	Input / Signaling Input / Output
Type test (IEC/EN 60950-1)	4 kV AC
Production test	3 kV AC
Field test	2 kV AC

Power factor

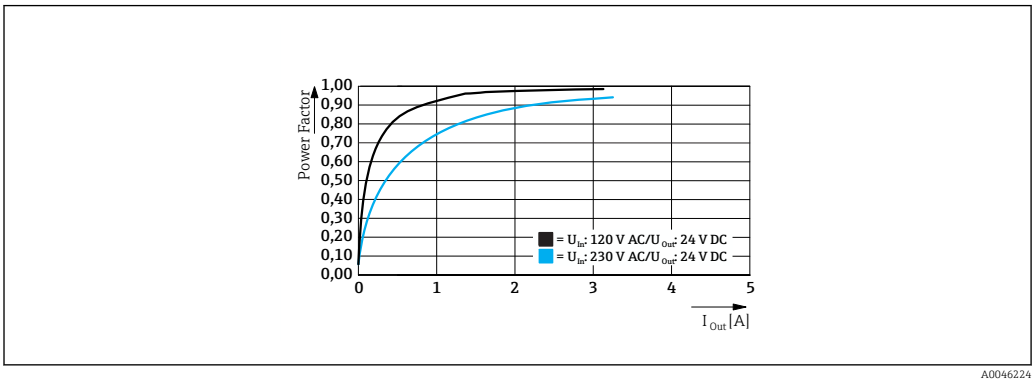

A0046224

Crest factor

120 V AC	230 V AC
typical 1.69	typical 1.82

Output

Output data

Nominal output voltage (U_N)	24 V_{DC}
Range of adjustment of output voltage (U_{Set}) (constant capacity)	24 to 28 V_{DC}
Nominal output current (I_N)	2.5 A
Static boost ($I_{Stat.Boost}$)	3.125 A (permanent up to 40 °C (104 °F))
Dynamic boost ($I_{Dyn.Boost}$)	5 A (can be invoked up to 60 °C (140 °F) for 5 s)
Control deviation, static load change 10 to 90 %	< 0.5 %
Control deviation, dynamic load change 10 to 90 %, (10 Hz)	< 2 %
Control deviation, input voltage change ±10 %	< 0.1 %
Short-circuit proof	yes
No-load proof	yes
Residual ripple (with nominal values)	< 40 mV_{SS}
Connection in parallel	Yes, for redundancy and increased capacity
Connection in series	yes
Feedback resistance	≤ 35 V_{DC}

Circuit breaker against overvoltage at output due to invasive foreign matter	≤ 32 V_{DC}
Rise time (typical)	50 ms (U_{Out} = 10 to 90 %)

Output data signals

Signal contact (configurable)

Digital	0 / 24 V_{DC} , 30 mA
Default	24 V_{DC} , 30 mA (24 V_{DC} for U_{Out} > 0.9 x U_{Set})

Energy supply

Terminal assignment

Quick wiring guide

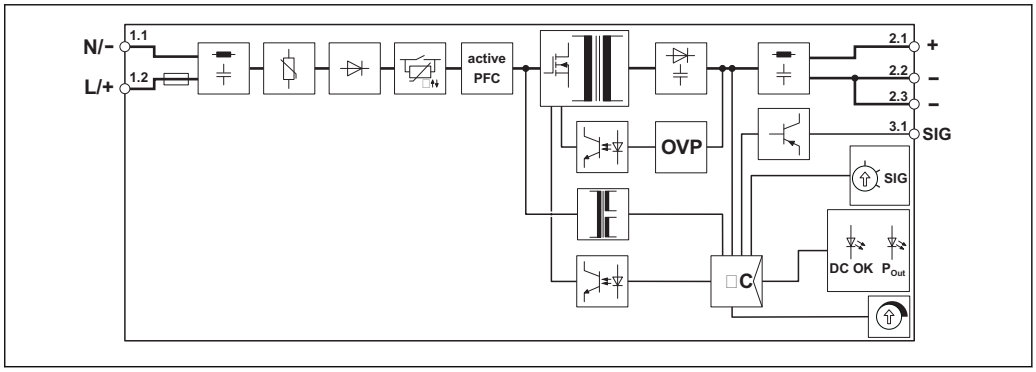

A0046100

1 Block diagram and terminal assignment for RNB22

Connecting the supply voltage

The power is supplied via the terminals 1.1 and 1.2.

Terminals

Terminal design	Cable design	Cable cross-section
Screw terminals Tightening torque: minimum 0.5 Nm maximum 0.6 Nm	Solid or flexible (stripping length = 8 mm (0.31 in)	0.14 to 2.5 mm² (26 to 14 AWG)
	Flexible with wire end ferrules (with or without plastic ferrule)	0.25 to 2.5 mm² (26 to 14 AWG)

Performance characteristics

Performance characteristics

Power dissipation	120 V_{AC}	230 V_{AC}
Maximum power dissipation in no-load condition	< 1 W	< 1 W
Maximum power dissipation in nominal condition	< 5 W	< 5 W

Efficiency	120 V_{AC}	230 V_{AC}
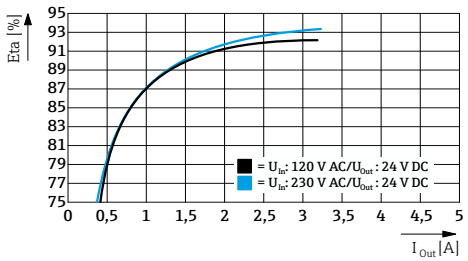	typical 91.9 %	typical 92.6 %

Reliability	230 V_{AC}
MTBF (IEC 61709, SN 29500)	> 1 347 000 h (25 °C (77 °F)) > 734 000 h (40 °C (104 °F)) > 295 000 h (60 °C (140 °F))

Life expectancy (electrolytic capacitors)

Output current (I_{Out})	120 V_{AC}	230 V_{AC}
2.5 A	> 148 000 h (40 °C (104 °F))	> 153 000 h (40 °C (104 °F))
2.5 A	> 419 000 h (25 °C (77 °F))	> 432 000 h (25 °C (77 °F))

The expected service life is based on the capacitors used. If the capacitor specification is observed, the specified data will be guaranteed until the end of the service life indicated. If the service life extends beyond this, error-free operation may be compromised. A service life of more than 15 years is used merely for comparison purposes.

Switching frequency	Minimum	Maximum
PFC stage	30 kHz	150 kHz
Auxiliary converter stage	4 kHz	70 kHz
Main converter stage	70 kHz	150 kHz

Boost currents

The power supply provides the static boost ($I_{Stat.Boost}$) for a sustained load supply or the time-limited dynamic boost ($I_{Dyn.Boost}$) .

Static boost

For plant expansion purposes, the sustained static boost ($I_{Stat.Boost}$) supports the load supply with up to 125 % of the nominal current of the power supply. Due to self-heating caused by the heat of the current, the static boost can be used at an ambient temperature of ≤ 40 °C (104 °F).

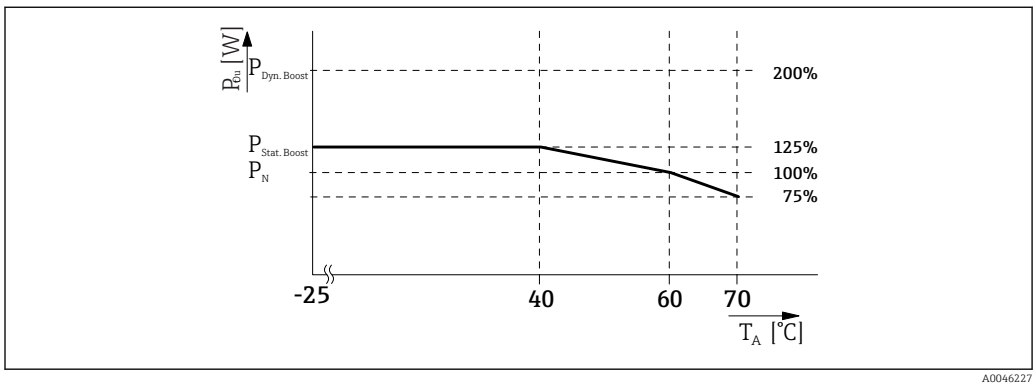

2 *Performance characteristic in static boost*

Dynamic boost

The dynamic boost ($I_{Dyn.Boost}$) delivers up to 200 % of the power supply nominal current to supply high loads. This temporary power supply to the load lasts a maximum of 5 s at an ambient temperature of up to 60 °C (140 °F).

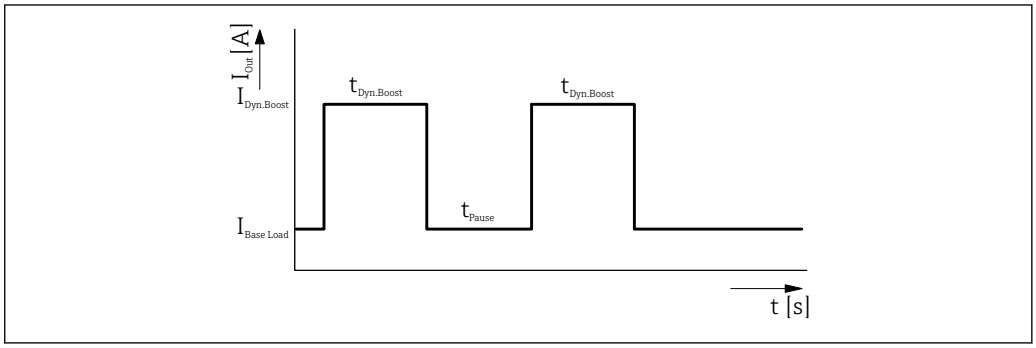

3 *Basic curve of the dynamic boost process*

Installation

Mounting location

The device is designed for installation on 35 mm (1.38 in) DIN rails in accordance with IEC 60715 (TH35).

Installing a DIN rail device

The device can be installed in any position (horizontal or vertical) on the DIN rail without lateral clearance from neighboring devices. No tools are required for installation. The use of end brackets on the DIN rail is recommended as an end support for the device.

The keepout areas highlighted in gray must be observed (see graphic):

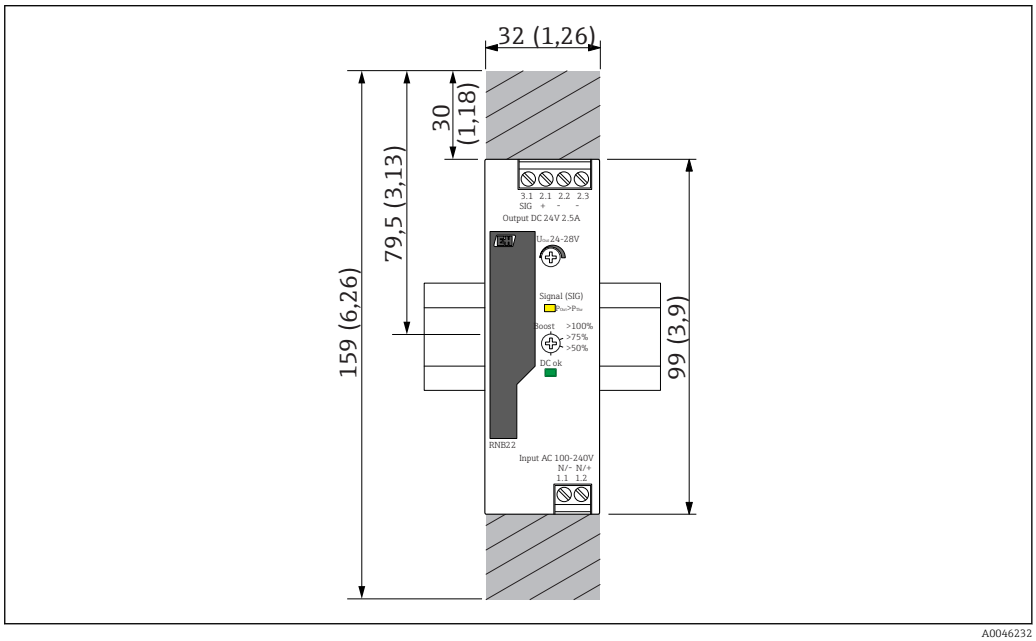

4 *Device dimensions and minimum keepout areas (in mm (in))*

Environment

Important ambient conditions

Ambient temperature range	−25 to 70 °C (−13 to 158 °F)	Storage temperature	−40 to 85 °C (−40 to 185 °F)
Ambient temperature (startup type-tested)	−40 °C (−40 °F)	Maximum permitted humidity (operation)	≤ 95 % (at 25 °C (77 °F), non-condensing)
Degree of protection	IP 20	Overvoltage category	II
Pollution degree	2	Altitude	≤ 5 000 m (16 404 ft) (> 2 000 m (6 562 ft) observe derating)
Climate class	3K3 (as per EN 60721)	Protection class	II

Derating

The RNB22 power supply unit runs in nominal operation without any limitations. For operation outside the nominal range, the following points must be observed depending on the type of use.

Ambient temperature

When operating the power supply unit at an ambient temperature > 60 °C (140 °F), a power derating of 2.5% must be observed. Up to an ambient temperature of 40 °C (104 °F), the power supply can take power from the static boost for a sustained period. In the 40 to 60 °C (104 to 140 °F) temperature range, the power supply can output more than the nominal power for a sustained period.

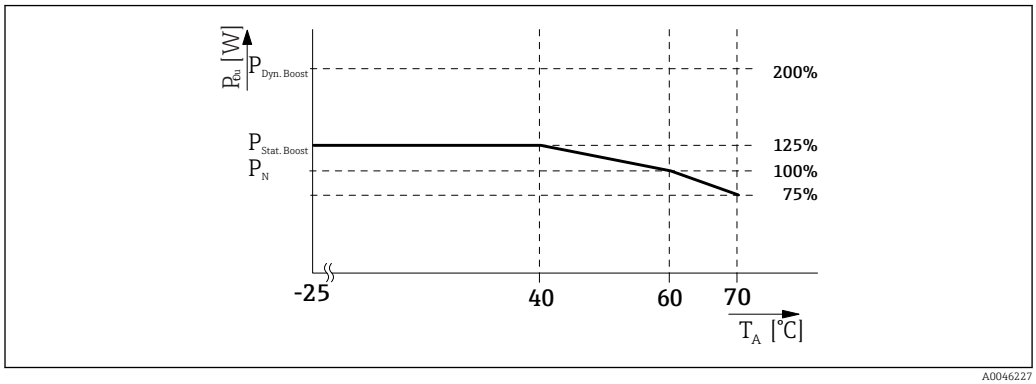

5 Output power depending on the ambient temperature

Installation height

The power supply can be operated at an installation height of up to 2 000 m (6 562 ft) without any limitations. Different data applies for installation locations above 2 000 m (6 562 ft) due to the differing air pressure and the associated reduction in convection cooling. The data provided is based on the results of pressure chamber testing performed by an accredited test laboratory.

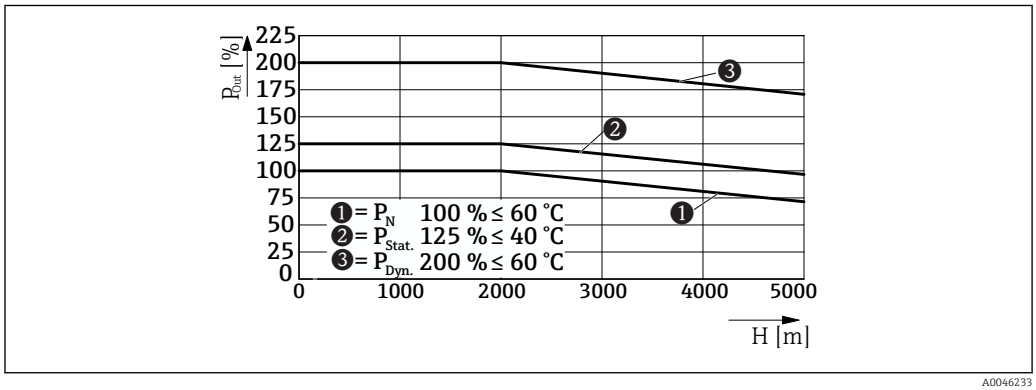

6 Output power depending on the installation height

Shock and vibration resistance

Vibration (operation)	< 15 Hz, amplitude ±2.5 mm; 15 to 100 Hz: 2.3g 90 min (as per IEC 60068-2-6)
Shock	18 ms, 30g, in each space direction (as per IEC 60068-2-27)
Overvoltage category EN 61010-1/EN 61010-2-201 EN 62477-1	 II III

Electromagnetic compatibility (EMC)

Immunity as per EN 61000-6-2

Noise radiation as per EN 61000-6-3 (Group 1, Class B)

Standards

Safety of power supply units up to 1100 V (insulation clearances)	DIN EN 61558-2-16
Electrical safety (of information technology equipment)	IEC 61010-1 (SELV)
Electrical safety (of control devices)	IEC 61010-1
Protective extra-low voltage	IEC 61010-1 (SELV) IEC 61010-2-201 (PELV)
Safe isolation	IEC 61558-2-16 IEC 61010-2-201

Mechanical construction

Design, dimensions

Dimensions in mm (in)

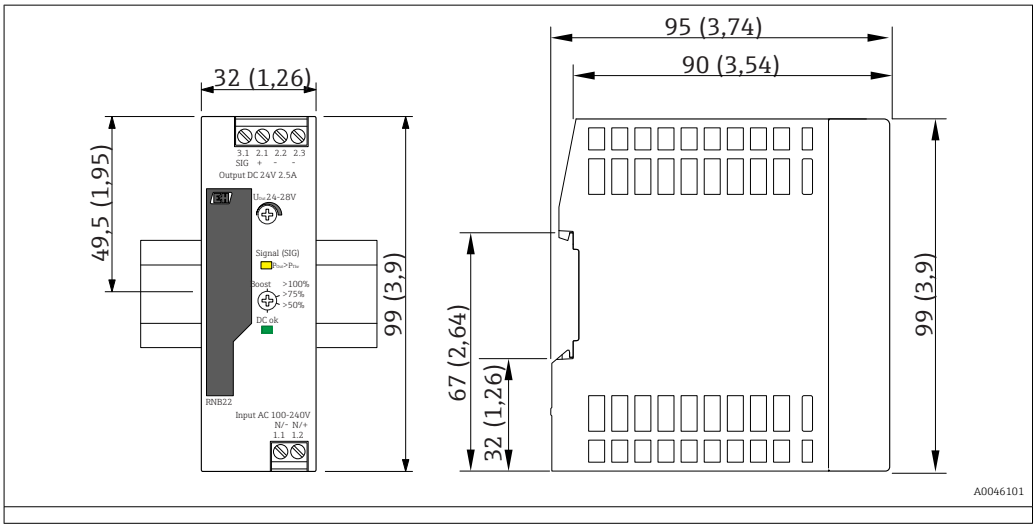

Weight

Device with terminals (values rounded up):

approx. 244 g (8.6 oz)

Color

Light gray (two-tone front)

Materials

All the materials used are RoHS-compliant.

Housing: polycarbonate (PC); flammability rating according to UL94: V-0

Display and operating elements

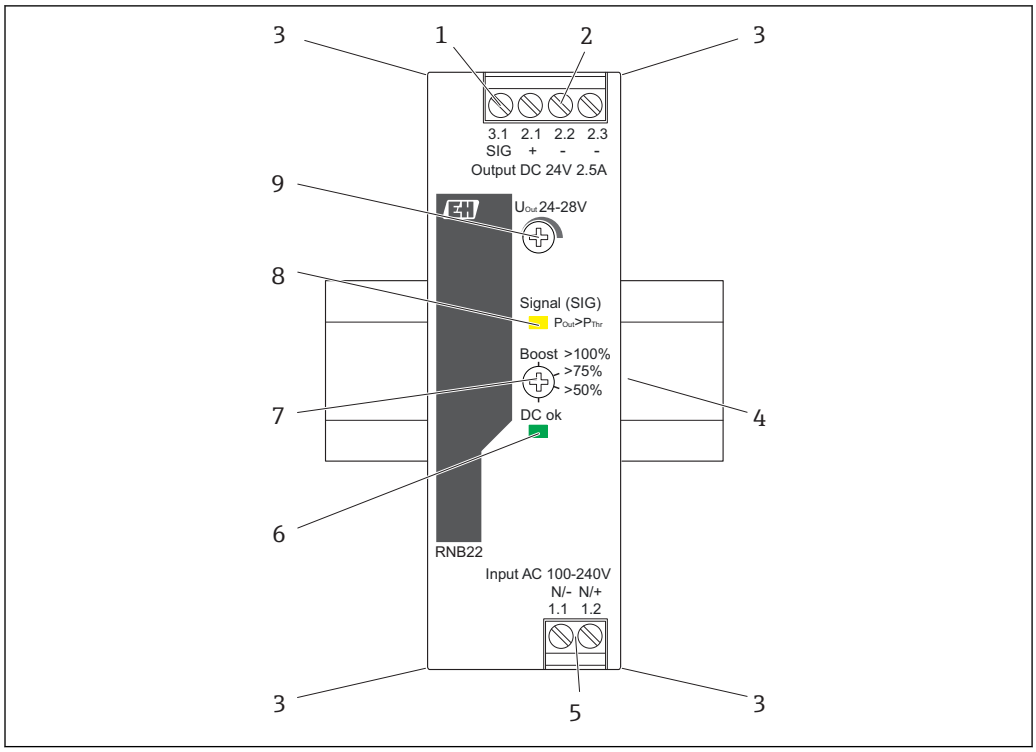

7 *Display and operating elements of the RNB22*

1 *Terminal, signal output (SIG) DC OK, $P_{Out} > P_{Thr}$: +24 V_{DC}, 30 mA*
2 *Terminal, output voltage: output DC +/-*
3 *Holder for cable ties*
4 *Integrated snap-on clip for mounting on carrier rail*
5 *Terminal, input voltage: input L/N*
6 *Signaling DC OK LED (green)*
7 *Rotary selector switch, status of output voltage (DC OK) or output power ($P_{Out} > P_{Thr}$)*
8 *Signaling $P_{Out} > P_{Thr}$-LED (yellow): output power P_{Out} > output power threshold P_{Thr}*
9 *Potentiometer, output voltage*

Local operation

LED signaling

$P_{Out} > P_{Thr}$	LED is lit yellow, output power > P_{Thr}, depending on position of rotary selector switch
$U_{OUT} > 0.9 \times U_{Set} \geq 0.9 \times U_{Set}$	LED is lit green
$U_{OUT} < 0.9 \times U_{Set} < 0.9 \times U_{Set}$	LED flashes green

The following table shows the standard assignment for signaling for the U/I characteristic curve configured at the factory:

	Normal operation $P_{Out} > P_{Thr}$	**BOOST $P_{Out} > P_{Thr}$**	**Overload operation $U_{Out} < 0.9 \times U_{Set}$**
yellow LED: $P_{Out} > P_{Thr}$	yellow LED off	yellow LED lit	yellow LED lit
Signal SIG: $P_{Out} > P_{Thr}$	Active high	Active low	Active low
green LED: DC OK	green LED lit	green LED lit	green LED flashes
Signal SIG: DC OK	Active high	Active high	Active low

Ordering information

Detailed ordering information is available for your nearest sales organization www.addresses.endress.com or in the Product Configurator under www.endress.com :

1. Click Corporate
2. Select the country
3. Click Products
4. Select the product using the filters and search field
5. Open the product page

The Configuration button to the right of the product image opens the Product Configurator.

Product Configurator - the tool for individual product configuration
- Up-to-the-minute configuration data
- Depending on the device: Direct input of measuring point-specific information such as measuring range or operating language
- Automatic verification of exclusion criteria
- Automatic creation of the order code and its breakdown in PDF or Excel output format
- Ability to order directly in the Endress+Hauser Online Shop

Accessories

Various accessories, which can be ordered with the device or subsequently from Endress+Hauser, are available for the device. Detailed information on the order code in question is available from your local Endress+Hauser sales center or on the product page of the Endress+Hauser website: www.endress.com.

Service-specific accessories

Accessories	Description
Configurator	Product Configurator - the tool for individual product configuration ▪ Up-to-the-minute configuration data ▪ Depending on the device: Direct input of measuring point-specific information such as measuring range or operating language ▪ Automatic verification of exclusion criteria ▪ Automatic creation of the order code and its breakdown in PDF or Excel output format ▪ Ability to order directly in the Endress+Hauser Online Shop The Configurator is available on the Endress+Hauser website at: www.endress.com -> Click "Corporate" -> Select your country -> Click "Products" -> Select the product using the filters and search field -> Open product page -> The "Configure" button to the right of the product image opens the Product Configurator.

Accessories	Description
W@M	Life cycle management for your plant W@M offers assistance with a wide range of software applications over the entire process: from planning and procurement to the installation, commissioning and operation of the measuring devices. All the relevant information is available for every measuring device over the entire life cycle, such as the device status, device-specific documentation, spare parts etc. The application already contains the data of your Endress+Hauser device. Endress+Hauser also takes care of maintaining and updating the data records. W@M is available: Via the Internet: www.endress.com/lifecyclemanagement

Certificates and approvals

For the approvals available, see the Configurator on the specific product page: www.endress.com → (search for device name)

CE mark

The product meets the requirements of the harmonized European standards. As such, it complies with the legal specifications of the EC directives. The manufacturer confirms successful testing of the product by affixing to it the CE-mark.

Supplementary documentation

The following types of documentation are available in the Download Area of the Endress+Hauser website (www.endress.com/downloads):

For an overview of the scope of the associated Technical Documentation, refer to the following:
- *W@M Device Viewer* (www.endress.com/deviceviewer): Enter the serial number from the nameplate
- *Endress+Hauser Operations App*: Enter the serial number from the nameplate or scan the 2D matrix code (QR code) on the nameplate

Operating Instructions (BA)

Your reference guide
These Operating Instructions contain all the information that is required in various phases of the life cycle of the device: from product identification, incoming acceptance and storage, to mounting, connection, operation and commissioning through to troubleshooting, maintenance and disposal.

Supplementary device-dependent documentation

Additional documents are supplied depending on the device version ordered: Always comply strictly with the instructions in the supplementary documentation. The supplementary documentation is an integral part of the device documentation.

71532104

www.addresses.endress.com

Endress+Hauser
People for Process Automation